OM-244 620J

2011–05

Processes

MIG (GMAW) Welding
Flux Cored (FCAW) Welding

Stick (SMAW) Welding

TIG (GTAW) Welding

Air Carbon Arc (CAC-A) Cutting and Gouging

Description

Engine Driven Welding Generator

Big Blue® 350 PipePro®

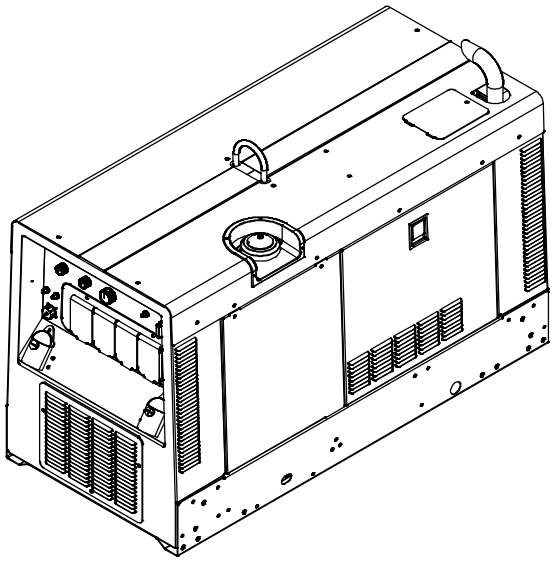

OWNER'S MANUAL

File: Engine Drive

Visit our website at

www.MillerWelds.com

From Miller to You

Thank you and *congratulations* on choosing Miller. Now you can get the job done and get it done right. We know you don't have time to do it any other way.

That's why when Niels Miller first started building arc welders in 1929, he made sure his products offered long-lasting value and superior quality. Like you, his customers couldn't afford anything less. Miller products had to be more than the best they could be. They had to be the best you could buy.

Today, the people that build and sell Miller products continue the tradition. They're just as committed to providing equipment and service that meets the high standards of quality and value established in 1929.

This Owner's Manual is designed to help you get the most out of your Miller products. Please take time to read the Safety precautions. They will help you protect yourself against potential hazards on the worksite.

ISO 9001 REGISTERED QUALITY SYSTEM

Miller is the first welding equipment manufacturer in the U.S.A. to be registered to the ISO 9001:2000 Quality System Standard.

We've made installation and operation quick and easy. With Miller you can count on years of reliable service with proper maintenance. And if for some reason the unit needs repair, there's a Troubleshooting section that will help you figure out what the problem is. The parts list will then help you to decide the exact part you may need to fix the problem. Warranty and service information for your particular model are also provided.

TRUE BLUE® WARRANTY

Working as hard as you do – every power source from Miller is backed by the most hassle-free warranty in the business.

Miller Electric manufactures a full line of welders and welding related equipment. For information on other quality Miller products, contact your local Miller distributor to receive the latest full line catalog or individual specification sheets. **To locate your nearest distributor or service agency call 1-800-4-A-Miller, or visit us at www.MillerWelds.com on the web.**

Miller®

TABLE OF CONTENTS

SECTION 1 – SAFETY PRECAUTIONS – READ BEFORE USING 1
1-1. Symbol Usage 1
1-2. Arc Welding Hazards 1
1-3. Engine Hazards 3
1-4. Hydraulic Hazards 4
1-5. Compressed Air Hazards 4
1-6. Additional Symbols For Installation, Operation, And Maintenance 5
1-7. California Proposition 65 Warnings 6
1-8. Principal Safety Standards 7
1-9. EMF Information 7
SECTION 2 – CONSIGNES DE SÉCURITÉ – LIRE AVANT UTILISATION 8
2-1. Signification des symboles 8
2-2. Dangers relatifs au soudage à l'arc 8
2-3. Dangers existant en relation avec le moteur 10
2-4. Dangers liés à l'hydraulique 11
2-5. Dangers liés à l'air comprimé 12
2-6. Dangers supplémentaires en relation avec l'installation, le fonctionnement et la maintenance 13
2-7. Proposition californienne 65 Avertissements 14
2-8. Principales normes de sécurité 15
2-9. Informations relatives aux CEM 15
SECTION 3 – DEFINITIONS 16
3-1. Symbols And Definitions 16
SECTION 4 – SPECIFICATIONS 17
4-1. Weld, Power, And Engine Specifications 17
4-2. Dimensions, Weights, And Operating Angles 17
4-3. CC Volt-Ampere Curves 18
4-4. Fuel Consumption 19
4-5. Duty Cycle And Overheating 19
4-6. AC Generator Power Curve 20
SECTION 5 – INSTALLATION 21
5-1. Serial Number And Rating Label Locations 21
5-2. Installing Welding Generator 21
5-3. Mounting Welding Generator 22
5-4. Grounding Generator To Truck Or Trailer Frame 23
5-5. Installing Exhaust Pipe 23
5-6. Activating The Dry Charge Battery (If Applicable) 24
5-7. Connecting The Battery 24
5-8. Engine Prestart Checks 25
5-9. Weld Output Terminals 26
5-10. Connecting To Weld Output Terminals 26
5-11. Selecting Weld Cable Sizes* 27
5-12. Connecting To Remote 14 Receptacle RC14 28
SECTION 6 – OPERATING WELDING GENERATOR 30
6-1. Front Panel Controls (See Section 6-2) 30
6-2. Description Of Front Panel Controls (See Section 6-1) 31
6-3. Process/Contactor Switch 32
6-4. Lift-Arc™ TIG With Auto-Stop™ 33
6-5. Remote Voltage/Amperage Control 34
6-6. Fuel/Hour Gauge Descriptions 35
6-7. Operating Engine Block Heater 36
SECTION 7 – OPERATING AUXILIARY EQUIPMENT 37
7-1. Generator Power Receptacles 37

TABLE OF CONTENTS

SECTION 8 – MAINTENANCE & TROUBLESHOOTING **38**
8-1. Maintenance Label 38
8-2. Routine Maintenance 39
8-3. Servicing Air Cleaner 40
8-4. Checking Generator Brushes 40
8-5. Inspecting And Cleaning Spark Arrestor Muffler 41
8-6. Servicing Engine Cooling System 41
8-7. Servicing Fuel And Lubrication Systems 42
8-8. Overload Protection 43
8-9. Adjusting Engine Speed 44
8-10. Voltmeter/Ammeter Help Displays 44
8-11. Maintaining Stainless Steel (Models With Optional Package) 44
8-12. Troubleshooting 45
SECTION 9 – ELECTRICAL DIAGRAMS **48**
SECTION 10 – RUN-IN PROCEDURE **50**
10-1. Wetstacking 50
10-2. Run-In Procedure Using Load Bank 51
10-3. Run-In Procedure Using Resistance Grid 52
SECTION 11 – GENERATOR POWER GUIDELINES **53**
SECTION 12 – PARTS LIST **60**
WARRANTY
OPTIONS AND ACCESSORIES

SECTION 1 – SAFETY PRECAUTIONS – READ BEFORE USING

rom_2011–04

Protect yourself and others from injury — read, follow, and save these important safety precautions and operating instructions.

1-1. Symbol Usage

DANGER! – Indicates a hazardous situation which, if not avoided, will result in death or serious injury. The possible hazards are shown in the adjoining symbols or explained in the text.

Indicates a hazardous situation which, if not avoided, could result in death or serious injury. The possible hazards are shown in the adjoining symbols or explained in the text.

NOTICE *– Indicates statements not related to personal injury.*

☞ *Indicates special instructions.*

This group of symbols means Warning! Watch Out! ELECTRIC SHOCK, MOVING PARTS, and HOT PARTS hazards. Consult symbols and related instructions below for necessary actions to avoid the hazards.

1-2. Arc Welding Hazards

The symbols shown below are used throughout this manual to call attention to and identify possible hazards. When you see the symbol, watch out, and follow the related instructions to avoid the hazard. The safety information given below is only a summary of the more complete safety information found in the Safety Standards listed in Section 1-8. Read and follow all Safety Standards.

Only qualified persons should install, operate, maintain, and repair this unit.

During operation, keep everybody, especially children, away.

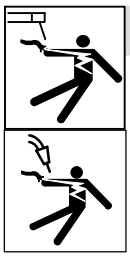

ELECTRIC SHOCK can kill.

Touching live electrical parts can cause fatal shocks or severe burns. The electrode and work circuit is electrically live whenever the output is on. The input power circuit and machine internal circuits are also live when power is on. In semiautomatic or automatic wire welding, the wire, wire reel, drive roll housing, and all metal parts touching the welding wire are electrically live. Incorrectly installed or improperly grounded equipment is a hazard.

- Do not touch live electrical parts.
- Wear dry, hole-free insulating gloves and body protection.
- Insulate yourself from work and ground using dry insulating mats or covers big enough to prevent any physical contact with the work or ground.
- Do not use AC output in damp areas, if movement is confined, or if there is a danger of falling.
- Use AC output ONLY if required for the welding process.
- If AC output is required, use remote output control if present on unit.
- Additional safety precautions are required when any of the following electrically hazardous conditions are present: in damp locations or while wearing wet clothing; on metal structures such as floors, gratings, or scaffolds; when in cramped positions such as sitting, kneeling, or lying; or when there is a high risk of unavoidable or accidental contact with the workpiece or ground. For these conditions, use the following equipment in order presented: 1) a semiautomatic DC constant voltage (wire) welder, 2) a DC manual (stick) welder, or 3) an AC welder with reduced open-circuit voltage. In most situations, use of a DC, constant voltage wire welder is recommended. And, do not work alone!
- Disconnect input power or stop engine before installing or servicing this equipment. Lockout/tagout input power according to OSHA 29 CFR 1910.147 (see Safety Standards).
- Properly install, ground, and operate this equipment according to its Owner's Manual and national, state, and local codes.
- Always verify the supply ground — check and be sure that input power cord ground wire is properly connected to ground terminal in disconnect box or that cord plug is connected to a properly grounded receptacle outlet.
- When making input connections, attach proper grounding conductor first – double-check connections.
- Keep cords dry, free of oil and grease, and protected from hot metal and sparks.
- Frequently inspect input power cord for damage or bare wiring — replace cord immediately if damaged — bare wiring can kill.
- Turn off all equipment when not in use.
- Do not use worn, damaged, undersized, or poorly spliced cables.
- Do not drape cables over your body.
- If earth grounding of the workpiece is required, ground it directly with a separate cable.
- Do not touch electrode if you are in contact with the work, ground, or another electrode from a different machine.
- Use only well-maintained equipment. Repair or replace damaged parts at once. Maintain unit according to manual.
- Do not touch electrode holders connected to two welding machines at the same time since double open-circuit voltage will be present.
- Wear a safety harness if working above floor level.
- Keep all panels and covers securely in place.
- Clamp work cable with good metal-to-metal contact to workpiece or worktable as near the weld as practical.
- Insulate work clamp when not connected to workpiece to prevent contact with any metal object.
- Do not connect more than one electrode or work cable to any single weld output terminal.

SIGNIFICANT DC VOLTAGE exists in inverter power sources AFTER stopping engine.

- Stop engine on inverter and discharge input capacitors according to instructions in Maintenance Section before touching any parts.

HOT PARTS can burn.

- Do not touch hot parts bare handed.
- Allow cooling period before working on equipment.
- To handle hot parts, use proper tools and/or wear heavy, insulated welding gloves and clothing to prevent burns.

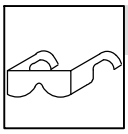

FLYING METAL or DIRT can injure eyes.

- Welding, chipping, wire brushing, and grinding cause sparks and flying metal. As welds cool, they can throw off slag.
- Wear approved safety glasses with side shields even under your welding helmet.

FUMES AND GASES can be hazardous.

Welding produces fumes and gases. Breathing these fumes and gases can be hazardous to your health.

- Keep your head out of the fumes. Do not breathe the fumes.
- If inside, ventilate the area and/or use local forced ventilation at the arc to remove welding fumes and gases.
- If ventilation is poor, wear an approved air-supplied respirator.
- Read and understand the Material Safety Data Sheets (MSDSs) and the manufacturer's instructions for metals, consumables, coatings, cleaners, and degreasers.
- Work in a confined space only if it is well ventilated, or while wearing an air-supplied respirator. Always have a trained watchperson nearby. Welding fumes and gases can displace air and lower the oxygen level causing injury or death. Be sure the breathing air is safe.
- Do not weld in locations near degreasing, cleaning, or spraying operations. The heat and rays of the arc can react with vapors to form highly toxic and irritating gases.
- Do not weld on coated metals, such as galvanized, lead, or cadmium plated steel, unless the coating is removed from the weld area, the area is well ventilated, and while wearing an air-supplied respirator. The coatings and any metals containing these elements can give off toxic fumes if welded.

BUILDUP OF GAS can injure or kill.

- Shut off shielding gas supply when not in use.
- Always ventilate confined spaces or use approved air-supplied respirator.

ARC RAYS can burn eyes and skin.

Arc rays from the welding process produce intense visible and invisible (ultraviolet and infrared) rays that can burn eyes and skin. Sparks fly off from the weld.

- Wear an approved welding helmet fitted with a proper shade of filter lenses to protect your face and eyes from arc rays and sparks when welding or watching (see ANSI Z49.1 and Z87.1 listed in Safety Standards).
- Wear approved safety glasses with side shields under your helmet.
- Use protective screens or barriers to protect others from flash, glare, and sparks; warn others not to watch the arc.
- Wear protective clothing made from durable, flame-resistant material (leather, heavy cotton, or wool) and foot protection.

WELDING can cause fire or explosion.

Welding on closed containers, such as tanks, drums, or pipes, can cause them to blow up. Sparks can fly off from the welding arc. The flying sparks, hot workpiece, and hot equipment can cause fires and burns. Accidental contact of electrode to metal objects can cause sparks, explosion, overheating, or fire. Check and be sure the area is safe before doing any welding.

- Remove all flammables within 35 ft (10.7 m) of the welding arc. If this is not possible, tightly cover them with approved covers.
- Do not weld where flying sparks can strike flammable material.
- Protect yourself and others from flying sparks and hot metal.
- Be alert that welding sparks and hot materials from welding can easily go through small cracks and openings to adjacent areas.
- Watch for fire, and keep a fire extinguisher nearby.
- Be aware that welding on a ceiling, floor, bulkhead, or partition can cause fire on the hidden side.
- Do not weld on closed containers such as tanks, drums, or pipes, unless they are properly prepared according to AWS F4.1 (see Safety Standards).
- Do not weld where the atmosphere may contain flammable dust, gas, or liquid vapors (such as gasoline).
- Connect work cable to the work as close to the welding area as practical to prevent welding current from traveling long, possibly unknown paths and causing electric shock, sparks, and fire hazards.
- Do not use welder to thaw frozen pipes.
- Remove stick electrode from holder or cut off welding wire at contact tip when not in use.
- Wear oil-free protective garments such as leather gloves, heavy shirt, cuffless trousers, high shoes, and a cap.
- Remove any combustibles, such as a butane lighter or matches, from your person before doing any welding.
- After completion of work, inspect area to ensure it is free of sparks, glowing embers, and flames.
- Use only correct fuses or circuit breakers. Do not oversize or bypass them.
- Follow requirements in OSHA 1910.252 (a) (2) (iv) and NFPA 51B for hot work and have a fire watcher and extinguisher nearby.

NOISE can damage hearing.

Noise from some processes or equipment can damage hearing.

- Wear approved ear protection if noise level is high.

ELECTRIC AND MAGNETIC FIELDS (EMF) can affect Implanted Medical Devices.

- Wearers of Pacemakers and other Implanted Medical Devices should keep away.
- Implanted Medical Device wearers should consult their doctor and the device manufacturer before going near arc welding, spot welding, gouging, plasma arc cutting, or induction heating operations.

CYLINDERS can explode if damaged.

Shielding gas cylinders contain gas under high pressure. If damaged, a cylinder can explode. Since gas cylinders are normally part of the welding process, be sure to treat them carefully.

- Protect compressed gas cylinders from excessive heat, mechanical shocks, physical damage, slag, open flames, sparks, and arcs.
- Install cylinders in an upright position by securing to a stationary support or cylinder rack to prevent falling or tipping.
- Keep cylinders away from any welding or other electrical circuits.
- Never drape a welding torch over a gas cylinder.
- Never allow a welding electrode to touch any cylinder.
- Never weld on a pressurized cylinder — explosion will result.
- Use only correct shielding gas cylinders, regulators, hoses, and fittings designed for the specific application; maintain them and associated parts in good condition.
- Turn face away from valve outlet when opening cylinder valve.
- Keep protective cap in place over valve except when cylinder is in use or connected for use.
- Use the right equipment, correct procedures, and sufficient number of persons to lift and move cylinders.
- Read and follow instructions on compressed gas cylinders, associated equipment, and Compressed Gas Association (CGA) publication P-1 listed in Safety Standards.

1-3. Engine Hazards

BATTERY EXPLOSION can injure.

- Always wear a face shield, rubber gloves, and protective clothing when working on a battery.
- Stop engine before disconnecting or connecting battery cables, battery charging cables (if applicable), or servicing battery.
- Do not allow tools to cause sparks when working on a battery.
- Do not use welder to charge batteries or jump start vehicles unless the unit has a battery charging feature designed for this purpose.
- Observe correct polarity (+ and –) on batteries.
- Disconnect negative (–) cable first and connect it last.
- Keep sparks, flames, cigarettes, and other ignition sources away from batteries. Batteries produce explosive gases during normal operation and when being charged.
- Follow battery manufacturer's instructions when working on or near a battery.

BATTERY CHARGING OUTPUT can injure.

(Battery charging feature not present on all models.)

- Have only qualified persons do battery charging work.
- Charge lead-acid batteries only. Do not use battery charger to supply power to an extra-low-voltage electrical system or to charge dry cell batteries.
- Do not charge a frozen battery.
- Do not use damaged charging cables.
- Do not charge a battery that has loose terminals or one showing damage such as a cracked case or cover.
- Before charging battery, select correct charger voltage to match battery voltage.
- Set battery charging controls to the Off position before connecting to battery. Do not allow battery charging clips to touch each other.
- Keep charging cables away from vehicle hood, door, or moving parts.

FUEL can cause fire or explosion.

- Stop engine and let it cool off before checking or adding fuel.
- Do not add fuel while smoking or if unit is near any sparks or open flames.
- Do not overfill tank — allow room for fuel to expand.
- Do not spill fuel. If fuel is spilled, clean up before starting engine.
- Dispose of rags in a fireproof container.
- Always keep nozzle in contact with tank when fueling.

MOVING PARTS can injure.

- Keep away from moving parts such as fans, belts, and rotors.
- Keep all doors, panels, covers, and guards closed and securely in place.
- Stop engine before installing or connecting unit.
- Have only qualified persons remove doors, panels, covers, or guards for maintenance and troubleshooting as necessary.
- To prevent accidental starting during servicing, disconnect negative (–) battery cable from battery.
- Keep hands, hair, loose clothing, and tools away from moving parts.
- Reinstall doors, panels, covers, or guards when servicing is finished and before starting engine.
- Before working on generator, remove spark plugs or injectors to keep engine from kicking back or starting.
- Block flywheel so that it will not turn while working on generator components.

EXHAUST SPARKS can cause fire.

- Do not let engine exhaust sparks cause fire.
- Use approved engine exhaust spark arrestor in required areas — see applicable codes.

HOT PARTS can burn.

- Do not touch hot parts bare handed.
- Allow cooling period before working on equipment.
- To handle hot parts, use proper tools and/or wear heavy, insulated welding gloves and clothing to prevent burns.

STEAM AND HOT COOLANT can burn.

- If possible, check coolant level when engine is cold to avoid scalding.
- Always check coolant level at overflow tank, if present on unit, instead of radiator (unless told otherwise in maintenance section or engine manual).
- If the engine is warm, checking is needed, and there is no overflow tank, follow the next two statements.
- Wear safety glasses and gloves and put a rag over radiator cap.
- Turn cap slightly and let pressure escape slowly before completely removing cap.

Using a generator indoors CAN KILL YOU IN MINUTES.

- Generator exhaust contains carbon monoxide. This is a poison you cannot see or smell.
- NEVER use inside a home or garage, EVEN IF doors and windows are open.
- Only use OUTSIDE and far away from windows, doors, and vents.

BATTERY ACID can BURN SKIN and EYES.

- Do not tip battery.
- Replace damaged battery.
- Flush eyes and skin immediately with water.

ENGINE HEAT can cause fire.

- Do not locate unit on, over, or near combustible surfaces or flammables.
- Keep exhaust and exhaust pipes way from flammables.

1-4. Hydraulic Hazards

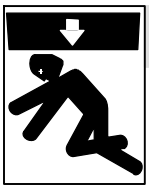

HYDRAULIC EQUIPMENT can injure or kill.

- Incorrect installation or operation of this unit could result in equipment failure and personal injury. Only qualified persons should install, operate, and service this unit according to its Owner's Manual, industry standards, and national, state, and local codes.
- Do not exceed the rated output or capacity of the hydraulic pump or any equipment in the hydraulic system. Design hydraulic system so failure of any hydraulic component will not put people or property at risk.
- Before working on hydraulic system, turn off and lockout/tagout unit, release pressure, and be sure hydraulic pressure cannot be accidentally applied.
- Do not work on hydraulic system with unit running unless you are a qualified person and following the manufacturer's instructions.
- Do not modify or alter hydraulic pump or manufacturer-supplied equipment. Do not disconnect, disable, or override any safety equipment in the hydraulic system.
- Use only components/accessories approved by the manufacturer.
- Keep away from potential pinch points or crush points created by equipment connected to the hydraulic system.
- Do not work under or around any equipment that is supported only by hydraulic pressure. Properly support equipment by mechanical means.

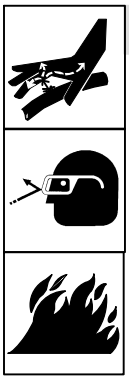

HYDRAULIC FLUID can injure or kill.

- Before working on hydraulic system, turn off and lockout/tagout unit, release pressure, and be sure hydraulic pressure cannot be accidentally applied.
- Relieve pressure before disconnecting or connecting hydraulic lines.
- Check hydraulic system components and all connections and hoses for damage, leaks, and wear before operating unit.
- Wear protective equipment such as safety glasses, leather gloves, heavy shirt and trousers, high shoes, and a cap when working on hydraulic system.
- Use a piece of paper or cardboard to search for leaks––never use bare hands. Do not use equipment if leaks are found.
- HYDRAULIC FLUID is FLAMMABLE––do not work on hydraulics near sparks or flames; do not smoke near hydraulic fluid.
- Reinstall doors, panels, covers, or guards when servicing is finished and before starting unit.
- If ANY fluid is injected into the skin, it must be surgically removed within a few hours by a doctor familiar with this type of injury or gangrene may result.

MOVING PARTS can injure.

- Keep away from moving parts such as fans, belts and rotors.
- Keep all doors, panels, covers, and guards closed and securely in place.
- Keep hands, hair, loose clothing, and tools away from moving parts.
- Before working on hydraulic system, turn off and lockout/tagout unit, release pressure, and be sure hydraulic pressure cannot be accidentally applied.
- Have only qualified people remove guards or covers for maintenance and troubleshooting as necessary.
- Reinstall doors, panels, covers, or guards when servicing is finished and before starting engine.

HOT PARTS AND FLUID can burn.

- Do not touch hot parts bare handed or allow hot fluid to contact skin.
- Allow cooling period before working on equipment.
- To handle hot parts, use proper tools and/or wear heavy, insulated welding gloves and clothing to prevent burns.

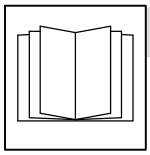

READ INSTRUCTIONS.

- Read and follow all labels and the Owner's Manual carefully before installing, operating, or servicing unit. Read the safety information at the beginning of the manual and in each section.
- Use only genuine replacement parts from the manufacturer.
- Perform maintenance and service according to the Owner's Manuals, industry standards, and national, state, and local codes.

1-5. Compressed Air Hazards

COMPRESSED AIR EQUIPMENT can injure or kill.

- Incorrect installation or operation of this unit could result in equipment failure and personal injury. Only qualified persons should install, operate, and service this unit according to its Owner's Manual, industry standards, and national, state, and local codes.
- Do not exceed the rated output or capacity of the compressor or any equipment in the compressed air system. Design compressed air system so failure of any component will not put people or property at risk.
- Before working on compressed air system, turn off and lockout/tagout unit, release pressure, and be sure air pressure cannot be accidentally applied.
- Do not work on compressed air system with unit running unless you are a qualified person and following the manufacturer's instructions.
- Do not modify or alter compressor or manufacturer-supplied equipment. Do not disconnect, disable, or override any safety equipment in the compressed air system.
- Use only components and accessories approved by the manufacturer.
- Keep away from potential pinch points or crush points created by equipment connected to the compressed air system.
- Do not work under or around any equipment that is supported only by air pressure. Properly support equipment by mechanical means.

HOT METAL from air arc cutting and gouging can cause fire or explosion.

- Do not cut or gouge near flammables.
- Watch for fire; keep extinguisher nearby.

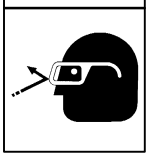

COMPRESSED AIR can injure or kill.

- Before working on compressed air system, turn off and lockout/tagout unit, release pressure, and be sure air pressure cannot be accidentally applied.
- Relieve pressure before disconnecting or connecting air lines.
- Check compressed air system components and all connections and hoses for damage, leaks, and wear before operating unit.
- Do not direct air stream toward self or others.
- Wear protective equipment such as safety glasses, hearing protection, leather gloves, heavy shirt and trousers, high shoes, and a cap when working on compressed air system.
- Use soapy water or an ultrasonic detector to search for leaks––never use bare hands. Do not use equipment if leaks are found.
- Reinstall doors, panels, covers, or guards when servicing is finished and before starting unit.
- If ANY air is injected into the skin or body seek medical help immediately.

BREATHING COMPRESSED AIR can injure or kill.

- Do not use compressed air for breathing.
- Use only for cutting, gouging, and tools.

TRAPPED AIR PRESSURE AND WHIPPING HOSES can injure.

- Release air pressure from tools and system before servicing, adding or changing attachments, or opening compressor oil drain or oil fill cap.

MOVING PARTS can injure.

- Keep away from moving parts such as fans, belts and rotors.
- Keep all doors, panels, covers, and guards closed and securely in place.
- Keep hands, hair, loose clothing, and tools away from moving parts.
- Before working on compressed air system, turn off and lockout/tagout unit, release pressure, and be sure air pressure cannot be accidentally applied.
- Have only qualified people remove guards or covers for maintenance and troubleshooting as necessary.
- Reinstall doors, panels, covers, or guards when servicing is finished and before starting engine.

HOT PARTS can burn.

- Do not touch hot compressor or air system parts.
- Allow cooling period before working on equipment.
- To handle hot parts, use proper tools and/or wear heavy, insulated welding gloves and clothing to prevent burns.

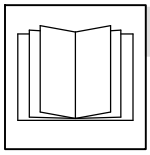

READ INSTRUCTIONS.

- Read and follow all labels and the Owner's Manual carefully before installing, operating, or servicing unit. Read the safety information at the beginning of the manual and in each section.
- Use only genuine replacement parts from the manufacturer.
- Perform maintenance and service according to the Owner's Manuals, industry standards, and national, state, and local codes.

1-6. Additional Symbols For Installation, Operation, And Maintenance

FIRE OR EXPLOSION hazard.

- Do not install or place unit on, over, or near combustible surfaces.
- Do not install unit near flammables.
- Do not overload building wiring – be sure power supply system is properly sized, rated, and protected to handle this unit.

FALLING EQUIPMENT can injure.

- Use lifting eye to lift unit and properly installed accessories only, NOT gas cylinders. Do not exceed maximum lift eye weight rating (see Specifications).
- Use equipment of adequate capacity to lift and support unit.
- If using lift forks to move unit, be sure forks are long enough to extend beyond opposite side of unit.
- Keep equipment (cables and cords) away from moving vehicles when working from an aerial location.
- Follow the guidelines in the Applications Manual for the Revised NIOSH Lifting Equation (Publication No. 94–110) when manually lifting heavy parts or equipment.

OVERHEATING can damage motors.

- Turn off or unplug equipment before starting or stopping engine.
- Do not let low voltage and frequency caused by low engine speed damage electric motors.
- Do not connect 50 or 60 Hertz motors to the 100 Hertz receptacle where applicable.

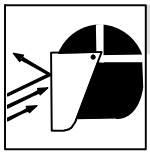

FLYING SPARKS can injure.

- Wear a face shield to protect eyes and face.
- Shape tungsten electrode only on grinder with proper guards in a safe location wearing proper face, hand, and body protection.
- Sparks can cause fires — keep flammables away.

MOVING PARTS can injure.

- Keep away from moving parts.
- Keep away from pinch points such as drive rolls.

WELDING WIRE can injure.

- Do not press gun trigger until instructed to do so.
- Do not point gun toward any part of the body, other people, or any metal when threading welding wire.

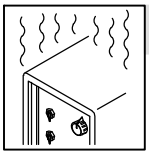

OVERUSE can cause OVERHEATING.

- Allow cooling period; follow rated duty cycle.
- Reduce current or reduce duty cycle before starting to weld again.
- Do not block or filter airflow to unit.

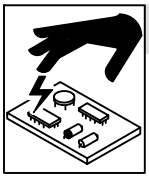

STATIC (ESD) can damage PC boards.

- Put on grounded wrist strap BEFORE handling boards or parts.
- Use proper static-proof bags and boxes to store, move, or ship PC boards.

TILTING OF TRAILER can injure.

- Use tongue jack or blocks to support weight.
- Properly install welding generator onto trailer according to instructions supplied with trailer.

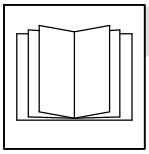

READ INSTRUCTIONS.

- Read and follow all labels and the Owner's Manual carefully before installing, operating, or servicing unit. Read the safety information at the beginning of the manual and in each section.
- Use only genuine replacement parts from the manufacturer.
- Perform maintenance and service according to the Owner's Manuals, industry standards, and national, state, and local codes.

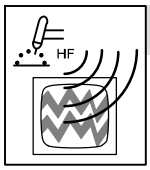

H.F. RADIATION can cause interference.

- High-frequency (H.F.) can interfere with radio navigation, safety services, computers, and communications equipment.
- Have only qualified persons familiar with electronic equipment perform this installation.
- The user is responsible for having a qualified electrician promptly correct any interference problem resulting from the installation.
- If notified by the FCC about interference, stop using the equipment at once.
- Have the installation regularly checked and maintained.
- Keep high-frequency source doors and panels tightly shut, keep spark gaps at correct setting, and use grounding and shielding to minimize the possibility of interference.

ARC WELDING can cause interference.

- Electromagnetic energy can interfere with sensitive electronic equipment such as microprocessors, computers, and computer-driven equipment such as robots.
- Be sure all equipment in the welding area is electromagnetically compatible.
- To reduce possible interference, keep weld cables as short as possible, close together, and down low, such as on the floor.
- Locate welding operation 100 meters from any sensitive electronic equipment.
- Be sure this welding machine is installed and grounded according to this manual.
- If interference still occurs, the user must take extra measures such as moving the welding machine, using shielded cables, using line filters, or shielding the work area.

1-7. California Proposition 65 Warnings

Welding or cutting equipment produces fumes or gases which contain chemicals known to the State of California to cause birth defects and, in some cases, cancer. (California Health & Safety Code Section 25249.5 et seq.)

Battery posts, terminals and related accessories contain lead and lead compounds, chemicals known to the State of California to cause cancer and birth defects or other reproductive harm. *Wash hands after handling.*

This product contains chemicals, including lead, known to the state of California to cause cancer, birth defects, or other reproductive harm. *Wash hands after use.*

For Gasoline Engines:

Engine exhaust contains chemicals known to the State of California to cause cancer, birth defects, or other reproductive harm.

For Diesel Engines:

Diesel engine exhaust and some of its constituents are known to the State of California to cause cancer, birth defects, and other reproductive harm.

1-8. Principal Safety Standards

Safety in Welding, Cutting, and Allied Processes, ANSI Standard Z49.1, from Global Engineering Documents (phone: 1-877-413-5184, website: www.global.ihs.com).

Safe Practices for the Preparation of Containers and Piping for Welding and Cutting, American Welding Society Standard AWS F4.1, from Global Engineering Documents (phone: 1-877-413-5184, website: www.global.ihs.com).

National Electrical Code, NFPA Standard 70, from National Fire Protection Association, Quincy, MA 02269 (phone: 1-800-344-3555, website: www.nfpa.org and www. sparky.org).

Safe Handling of Compressed Gases in Cylinders, CGA Pamphlet P-1, from Compressed Gas Association, 4221 Walney Road, 5th Floor, Chantilly, VA 20151 (phone: 703-788-2700, website:www.cganet.com).

Safety in Welding, Cutting, and Allied Processes, CSA Standard W117.2, from Canadian Standards Association, Standards Sales, 5060 Spectrum Way, Suite 100, Ontario, Canada L4W 5NS (phone: 800-463-6727, website: www.csa-international.org).

Battery Chargers, CSA Standard C22.2 NO 107.2–01, from Canadian Standards Association, Standards Sales, 5060 Spectrum Way, Suite 100, Ontario, Canada L4W 5NS (phone: 800-463-6727, website: www.csa-international.org).

Safe Practice For Occupational And Educational Eye And Face Protection, ANSI Standard Z87.1, from American National Standards Institute, 25 West 43rd Street, New York, NY 10036 (phone: 212-642-4900, website: www.ansi.org).

Standard for Fire Prevention During Welding, Cutting, and Other Hot Work, NFPA Standard 51B, from National Fire Protection Association, Quincy, MA 02269 (phone: 1-800-344-3555, website: www.nfpa.org.

For Standards about hydraulic systems, contact the National Fluid Power Association, Publications Department, 3333 North Mayfair Road, Suite 211, Milwaukee, WI 53222-3219 (phone: (414) 778-3344, website: www.nfpa.com).

OSHA, Occupational Safety and Health Standards for General Industry, Title 29, Code of Federal Regulations (CFR), Part 1910, Subpart Q, and Part 1926, Subpart J, from U.S. Government Printing Office, Superintendent of Documents, P.O. Box 371954, Pittsburgh, PA 15250-7954 (phone: 1-866-512-1800) (there are 10 OSHA Regional Offices—phone for Region 5, Chicago, is 312-353-2220, website: www.osha.gov).

U.S. Consumer Product Safety Commission (CPSC), 4330 East West Highway, Bethesda, MD 20814 (phone: 301-504-7923, website: www.cpsc.gov).

Applications Manual for the Revised NIOSH Lifting Equation, The National Institute for Occupational Safety and Health (NIOSH), 1600 Clifton Rd, Atlanta, GA 30333 (phone: 1-800-232-4636, website: www.cdc.gov/NIOSH).

1-9. EMF Information

Electric current flowing through any conductor causes localized electric and magnetic fields (EMF). Welding current creates an EMF field around the welding circuit and welding equipment. EMF fields may interfere with some medical implants, e.g. pacemakers. Protective measures for persons wearing medical implants have to be taken. For example, access restrictions for passers–by or individual risk assessment for welders. All welders should use the following procedures in order to minimize exposure to EMF fields from the welding circuit:

1. Keep cables close together by twisting or taping them, or using a cable cover.
2. Do not place your body between welding cables. Arrange cables to one side and away from the operator.
3. Do not coil or drape cables around your body.
4. Keep head and trunk as far away from the equipment in the welding circuit as possible.
5. Connect work clamp to workpiece as close to the weld as possible.
6. Do not work next to, sit or lean on the welding power source.
7. Do not weld whilst carrying the welding power source or wire feeder.

About Implanted Medical Devices:

Implanted Medical Device wearers should consult their doctor and the device manufacturer before performing or going near arc welding, spot welding, gouging, plasma arc cutting, or induction heating operations. If cleared by your doctor, then following the above procedures is recommended.

SECTION 2 – CONSIGNES DE SÉCURITÉ – LIRE AVANT UTILISATION

Pour écarter les risques de blessure pour vous–même et pour autrui — lire, appliquer et ranger en lieu sûr ces consignes relatives aux précautions de sécurité et au mode opératoire.

2-1. Signification des symboles

DANGER! – Indique une situation dangereuse qui si on l'évite pas peut donner la mort ou des blessures graves. Les dangers possibles sont montrés par les symboles joints ou sont expliqués dans le texte.

Indique une situation dangereuse qui si on l'évite pas peut donner la mort ou des blessures graves. Les dangers possibles sont montrés par les symboles joints ou sont expliqués dans le texte.

NOTE *– Indique des déclarations pas en relation avec des blessures personnelles.*

☞ *Indique des instructions spécifiques.*

Ce groupe de symboles veut dire Avertissement! Attention! DANGER DE CHOC ELECTRIQUE, PIECES EN MOUVEMENT, et PIECES CHAUDES. Consulter les symboles et les instructions ci-dessous y afférant pour les actions nécessaires afin d'éviter le danger.

2-2. Dangers relatifs au soudage à l'arc

Les symboles présentés ci-après sont utilisés tout au long du présent manuel pour attirer votre attention et identifier les risques de danger. Lorsque vous voyez un symbole, soyez vigilant et suivez les directives mentionnées afin d'éviter tout danger. Les consignes de sécurité présentées ci-après ne font que résumer l'information contenue dans les normes de sécurité énumérées à la section 1-8. Veuillez lire et respecter toutes ces normes de sécurité.

L'installation, l'utilisation, l'entretien et les réparations ne doivent être confiés qu'à des personnes qualifiées.

Au cours de l'utilisation, tenir toute personne à l'écart et plus particulièrement les enfants.

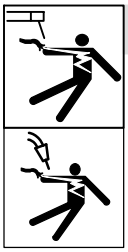

UN CHOC ÉLECTRIQUE peut tuer.

Un simple contact avec des pièces électriques peut provoquer une électrocution ou des blessures graves. L'électrode et le circuit de soudage sont sous tension dès que l'appareil est sur ON. Le circuit d'entrée et les circuits internes de l'appareil sont également sous tension à ce moment-là. En soudage semi-automatique ou automatique, le fil, le dévidoir, le logement des galets d'entraînement et les pièces métalliques en contact avec le fil de soudage sont sous tension. Des matériels mal installés ou mal mis à la terre présentent un danger.

- Ne jamais toucher les pièces électriques sous tension.
- Porter des gants et des vêtements de protection secs ne comportant pas de trous.
- S'isoler de la pièce et de la terre au moyen de tapis ou d'autres moyens isolants suffisamment grands pour empêcher le contact physique éventuel avec la pièce ou la terre.
- Ne pas se servir de source électrique à courant électrique dans les zones humides, dans les endroits confinés ou là où on risque de tomber.
- Se servir d'une source électrique à courant électrique UNIQUEMENT si le procédé de soudage le demande.
- Si l'utilisation d'une source électrique à courant électrique s'avère nécessaire, se servir de la fonction de télécommande si l'appareil en est équipé.
- Des précautions de sécurité supplémentaires sont requises dans des environnements à risque comme: les endroits humides ou lorsque l'on porte des vêtements mouillés; sur des structures métalliques au sol, grillages et échafaudages; dans des positions assises, à genoux et allongées; ou quand il y a un risque important de contact accidentel avec la pièce ou le sol. Dans ces cas utiliser les appareils suivants dans l'ordre de préférence: 1) un poste à souder DC semi–automatique de type CV (MIG/MAG), 2) un poste à souder manuel (électrode enrobée) DC, 3) un poste à souder manuel AC avec tension à vide réduite. Dans la plupart des cas, un poste courant continu de type CV est recommandé. Et, ne pas travailler seul!
- Couper l'alimentation ou arrêter le moteur avant de procéder à l'installation, à la réparation ou à l'entretien de l'appareil. Déverrouiller l'alimentation selon la norme OSHA 29 CFR 1910.147 (voir normes de sécurité).
- Installez, mettez à la terre et utilisez correctement cet équipement conformément à son Manuel d'Utilisation et aux réglementations nationales, gouvernementales et locales.
- Installer et mettre à la terre correctement cet appareil conformément à son manuel d'utilisation et aux codes nationaux, provinciaux et municipaux.
- Toujours vérifier la terre du cordon d'alimentation – Vérifier et s'assurer que le fil de terre du cordon d'alimentation est bien raccordé à la borne de terre du sectionneur ou que la fiche du cordon est raccordée à une prise correctement mise à la terre.
- En effectuant les raccordements d'entrée fixer d'abord le conducteur de mise à la terre approprié et contre-vérifier les connexions.
- Les câbles doivent être exempts d'humidité, d'huile et de graisse; protégez–les contre les étincelles et les pièces métalliques chaudes.
- Vérifier fréquemment le cordon d'alimentation pour voir s'il n'est pas endommagé ou dénudé – remplacer le cordon immédiatement s'il est endommagé – un câble dénudé peut provoquer une électrocution.
- Mettre l'appareil hors tension quand on ne l'utilise pas.
- Ne pas utiliser des câbles usés, endommagés, de grosseur insuffisante ou mal épissés.
- Ne pas enrouler les câbles autour du corps.
- Si la pièce soudée doit être mise à la terre, le faire directement avec un câble distinct – ne pas utiliser le connecteur de pièce ou le câble de retour.
- Ne pas toucher l'électrode quand on est en contact avec la pièce, la terre ou une électrode provenant d'une autre machine.
- Ne pas toucher des porte électrodes connectés à deux machines en même temps à cause de la présence d'une tension à vide doublée.
- N'utiliser qu'un matériel en bon état. Réparer ou remplacer sur-le-champ les pièces endommagées. Entretenir l'appareil conformément à ce manuel.
- Porter un harnais de sécurité quand on travaille en hauteur.
- Maintenir solidement en place tous les panneaux et capots.
- Fixer le câble de retour de façon à obtenir un bon contact métal-métal avec la pièce à souder ou la table de travail, le plus près possible de la soudure.
- Isoler la pince de masse quand pas mis à la pièce pour éviter le contact avec tout objet métallique.

Il reste une TENSION DC NON NÉGLIGEABLE dans les sources de soudage onduleur UNE FOIS le moteur coupé.

- Couper l'alimentation du poste et décharger les condensateurs d'entrée comme indiqué dans la Section Maintenance avant de toucher des composants.

LES PIÈCES CHAUDES peuvent provoquer des brûlures.

- Ne pas toucher à mains nues les parties chaudes.
- Prévoir une période de refroidissement avant de travailler à l'équipement.
- Ne pas toucher aux pièces chaudes, utiliser les outils recommandés et porter des gants de soudage et des vêtements épais pour éviter les brûlures.

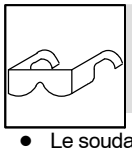

DES PIECES DE METAL ou DES SALETES peuvent provoquer des blessures dans les yeux.

- Le soudage, l'écaillement, le passage de la pièce à la brosse en fil de fer, et le meulage génèrent des étincelles et des particules métalliques volantes. Pendant la période de refroidissement des soudures, elles risquent de projeter du laitier.
- Porter des lunettes de sécurité avec écrans latéraux ou un écran facial.

LES FUMÉES ET LES GAZ peuvent être dangereux.

Le soudage génère des fumées et des gaz. Leur inhalation peut être dangereux pour votre santé.

- Eloigner votre tête des fumées. Ne pas respirer les fumées.
- À l'intérieur, ventiler la zone et/ou utiliser une ventilation forcée au niveau de l'arc pour l'évacuation des fumées et des gaz de soudage.
- Si la ventilation est médiocre, porter un respirateur anti-vapeurs approuvé.
- Lire et comprendre les spécifications de sécurité des matériaux (MSDS) et les instructions du fabricant concernant les métaux, les consommables, les revêtements, les nettoyants et les dégraisseurs.
- Travailler dans un espace fermé seulement s'il est bien ventilé ou en portant un respirateur à alimentation d'air. Demander toujours à un surveillant dûment formé de se tenir à proximité. Des fumées et des gaz de soudage peuvent déplacer l'air et abaisser le niveau d'oxygène provoquant des blessures ou des accidents mortels. S'assurer que l'air de respiration ne présente aucun danger.
- Ne pas souder dans des endroits situés à proximité d'opérations de dégraissage, de nettoyage ou de pulvérisation. La chaleur et les rayons de l'arc peuvent réagir en présence de vapeurs et former des gaz hautement toxiques et irritants.
- Ne pas souder des métaux munis d'un revêtement, tels que l'acier galvanisé, plaqué en plomb ou au cadmium à moins que le revêtement n'ait été enlevé dans la zone de soudure, que l'endroit soit bien ventilé, et en portant un respirateur à alimentation d'air. Les revêtements et tous les métaux renfermant ces éléments peuvent dégager des fumées toxiques en cas de soudage.

LES ACCUMULATIONS DE GAZ risquent de provoquer des blessures ou même la mort.

- Fermer l'alimentation du gaz protecteur en cas de non utilisation.
- Veiller toujours à bien aérer les espaces confinés ou se servir d'un respirateur d'adduction d'air homologué.

LES RAYONS DE L'ARC peuvent provoquer des brûlures dans les yeux et sur la peau.

Le rayonnement de l'arc du procédé de soudage génère des rayons visibles et invisibles intenses (ultraviolets et infrarouges) susceptibles de provoquer des brûlures dans les yeux et sur la peau. Des étincelles sont projetées pendant le soudage.

- Porter un casque de soudage approuvé muni de verres filtrants approprié pour protéger visage et yeux pour protéger votre visage et vos yeux pendant le soudage ou pour regarder (voir ANSI Z49.1 et Z87.1 énuméré dans les normes de sécurité).
- Porter des lunettes de sécurité avec écrans latéraux même sous votre casque.
- Avoir recours à des écrans protecteurs ou à des rideaux pour protéger les autres contre les rayonnements les éblouissements et les étincelles ; prévenir toute personne sur les lieux de ne pas regarder l'arc.
- Porter des vêtements confectionnés avec des matières résistantes et ignifuges (cuir, coton lourd ou laine) et des bottes de protection.

LE SOUDAGE peut provoquer un incendie ou une explosion.

Le soudage effectué sur des conteneurs fermés tels que des réservoirs, tambours ou des conduites peut provoquer leur éclatement. Des étincelles peuvent être projetées de l'arc de soudure. La projection d'étincelles, des pièces chaudes et des équipements chauds peut provoquer des incendies et des brûlures. Le contact accidentel de l'électrode avec des objets métalliques peut provoquer des étincelles, une explosion, un surchauffement ou un incendie. Avant de commencer le soudage, vérifier et s'assurer que l'endroit ne présente pas de danger.

- Déplacer toutes les substances inflammables à une distance de 10,7 m de l'arc de soudage. En cas d'impossibilité les recouvrir soigneusement avec des protections homologués.
- Ne pas souder dans un endroit là où des étincelles peuvent tomber sur des substances inflammables.
- Se protéger et d'autres personnes de la projection d'étincelles et de métal chaud.
- Des étincelles et des matériaux chauds du soudage peuvent facilement passer dans d'autres zones en traversant de petites fissures et des ouvertures.
- Surveiller tout déclenchement d'incendie et tenir un extincteur à proximité.
- Le soudage effectué sur un plafond, plancher, paroi ou séparation peut déclencher un incendie de l'autre côté.
- Ne pas effectuer le soudage sur des conteneurs fermés tels que des réservoirs, tambours, ou conduites, à moins qu'ils n'aient été préparés correctement conformément à AWS F4.1 (voir les normes de sécurité).
- Ne soudez pas si l'air ambiant est chargé de particules, gaz, ou vapeurs inflammables (vapeur d'essence, par exemple).
- Brancher le câble de masse sur la pièce le plus près possible de la zone de soudage pour éviter le transport du courant sur une longue distance par des chemins inconnus éventuels en provoquant des risques d'électrocution, d'étincelles et d'incendie.
- Ne pas utiliser le poste de soudage pour dégeler des conduites gelées.
- En cas de non utilisation, enlever la baguette d'électrode du porte-électrode ou couper le fil à la pointe de contact.
- Porter des vêtements de protection dépourvus d'huile tels que des gants en cuir, une chemise en matériau lourd, des pantalons sans revers, des chaussures hautes et un couvre chef.
- Avant de souder, retirer toute substance combustible de vos poches telles qu'un allumeur au butane ou des allumettes.
- Une fois le travail achevé, assurez–vous qu'il ne reste aucune trace d'étincelles incandescentes ni de flammes.
- Utiliser exclusivement des fusibles ou coupe–circuits appropriés. Ne pas augmenter leur puissance; ne pas les ponter.
- Suivre les recommandations dans OSHA 1910.252(a)(2)(iv) et NFPA 51B pour les travaux à chaud et avoir de la surveillance et un extincteur à proximité.

LE BRUIT peut affecter l'ouïe.

Le bruit des processus et des équipements peut affecter l'ouïe.

- Porter des protections approuvés pour les oreilles si le niveau sonore est trop élevé.

Les CHAMPS ÉLECTROMAGNÉTIQUES (CEM) peuvent affecter les implants médicaux.

- Les porteurs de stimulateurs cardiaques et autres implants médicaux doivent rester à distance.
- Les porteurs d'implants médicaux doivent consulter leur médecin et le fabricant du dispositif avant de s'approcher de la zone où se déroule du soudage à l'arc, du soudage par points, du gougeage, de la découpe plasma ou une opération de chauffage par induction.

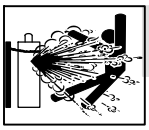

Si des BOUTEILLES sont endommagées, elles pourront exploser.

Des bouteilles de gaz protecteur contiennent du gaz sous haute pression. Si une bouteille est endommagée, elle peut exploser. Du fait que les bouteilles de gaz font normalement partie du procédé de soudage, les manipuler avec précaution.

- Protéger les bouteilles de gaz comprimé d'une chaleur excessive, des chocs mécaniques, des dommages physiques, du laitier, des flammes ouvertes, des étincelles et des arcs.
- Placer les bouteilles debout en les fixant dans un support stationnaire ou dans un porte-bouteilles pour les empêcher de tomber ou de se renverser.
- Tenir les bouteilles éloignées des circuits de soudage ou autres circuits électriques.
- Ne jamais placer une torche de soudage sur une bouteille à gaz.
- Une électrode de soudage ne doit jamais entrer en contact avec une bouteille.
- Ne jamais souder une bouteille pressurisée – risque d'explosion.
- Utiliser seulement des bouteilles de gaz protecteur, régulateurs, tuyaux et raccords convenables pour cette application spécifique; les maintenir ainsi que les éléments associés en bon état.
- Ne pas tenir la tête en face de la sortie en ouvrant la soupape de la bouteille.
- Maintenir le chapeau de protection sur la soupape, sauf en cas d'utilisation ou de branchement de la bouteille.
- Utiliser les équipements corrects, les bonnes procédures et suffisamment de personnes pour soulever et déplacer les bouteilles.
- Lire et suivre les instructions sur les bouteilles de gaz comprimé, l'équipement connexe et le dépliant P-1 de la CGA (Compressed Gas Association) mentionné dans les principales normes de sécurité.

2-3. Dangers existant en relation avec le moteur

L'EXPLOSION DE LA BATTERIE peut provoquer des blessures.

- Toujours porter une protection faciale, des gants en caoutchouc et vêtements de protection lors d'une intervention sur la batterie.
- Arrêter le moteur avant de débrancher ou de brancher des câbles de batterie, des câbles de chargeur de batterie (le cas échéant) ou de batterie d'entretien.
- Eviter de provoquer des étincelles avec les outils en travaillant sur la batterie.
- Ne pas utiliser l'appareil de soudage pour charger des batteries ou faire démarrer des véhicules à l'aide de câbles de démarrage, sauf si l'appareil dispose d'une fonctionnalité de charge de batterie destinée à cet usage.
- Observer la polarité correcte (+ et –) sur les batteries.
- Débrancher le câble négatif (–) en premier lieu. Le rebrancher en dernier lieu.
- Les sources d'étincelles, flammes nues, cigarettes et autres sources d'inflammation doivent être maintenues à l'écart des batteries. Ces dernières produisent des gaz explosifs en fonctionnement normal et en cours de charge.
- Respecter les consignes du fabricant de la batterie pour travailler sur une batterie ou à proximité.

Le COURANT DE CHARGE DE BATTERIE peut provoquer des blessures (la fonctionnalité de charge de batterie n'est pas disponible sur tous les modèles).

- Les opérations de charge de batterie ne doivent être effectuées que par des personnes qualifiées.
- Ne charger que des batteries plomb–acide. Ne pas utiliser le chargeur de batterie pour alimenter un autre circuit électrique basse tension ou pour charger des batteries sèches.
- Ne pas charger une batterie gelée.
- Ne pas utiliser de câbles de charge endommagés.
- Ne pas charger une batterie dont les bornes sont desserrées ou présentant une détérioration comme par exemple un boîtier ou un couvercle fissuré.
- Avant de charger une batterie, sélectionner la tension de charge correspondant à la tension de la batterie.
- Régler les commandes de charge de batterie sur la position d'arrêt avant de brancher la batterie. Veiller à ce que les pinces de charge ne se touchent pas.
- Ranger les câbles de charge à distance du capot, des portes et des pièces mobiles du véhicule.

LE CARBURANT MOTEUR peut provoquer un incendie ou une explosion.

- Arrêter le moteur avant de vérifier le niveau de carburant ou de faire le plein.
- Ne pas faire le plein en fumant ou proche d'une source d'étincelles ou d'une flamme nue.
- Ne pas faire le plein de carburant à ras bord; prévoir de l'espace pour son expansion.
- Faire attention de ne pas renverser de carburant. Nettoyer tout carburant renversé avant de faire démarrer le moteur.
- Jeter les chiffons dans un récipient ignifuge.
- Toujours garder le pistolet en contact avec le réservoir lors du remplissage.

Les PIÈCES MOBILES peuvent causer des blessures.

- S'abstenir de toucher des parties mobiles telles que des ventilateurs, courroies et rotors.
- Maintenir fermés et verrouillés les portes, panneaux, recouvrements et dispositifs de protection.
- Arrêter le moteur avant d'installer ou brancher l'appareil.
- Lorsque cela est nécessaire pour des travaux d'entretien et de dépannage, faire retirer les portes, panneaux, recouvrements ou dispositifs de protection uniquement par du personnel qualifié.
- Pour empêcher tout démarrage accidentel pendant les travaux d'entretien, débrancher le câble négatif (–) de batterie de la borne.
- Ne pas approcher les mains, cheveux, vêtements lâches et outils des organes mobiles.
- Remettre en place les portes, panneaux, recouvrements ou dispositifs de protection à la fin des travaux d'entretien et avant de mettre le moteur en marche.
- Avant d'intervenir, déposer les bougies ou injecteurs pour éviter la mise en route accidentelle du moteur.
- Bloquer le volant moteur pour éviter sa rotation lors d'une intervention sur le générateur.

LES ÉTINCELLES À L'ÉCHAPPEMENT peuvent provoquer un incendie.

- Empêcher les étincelles d'échappement du moteur de provoquer un incendie.
- Utiliser uniquement un pare-étincelles approuvé – voir codes en vigueur.

LES PIÈCES CHAUDES peuvent provoquer des brûlures.

- Ne pas toucher des parties chaudes à mains nues.
- Prévoir une période de refroidissement avant de travailler à l'équipement.
- Ne pas toucher aux pièces chaudes, utiliser les outils recommandés et porter des gants de soudage et des vêtements épais pour éviter les brûlures.

LA VAPEUR ET LE LIQUIDE DE REFROIDISSEMENT CHAUD peuvent provoquer des brûlures.

- Il est préférable de vérifier le liquide de refroidissement une fois le moteur refroidi pour éviter de se brûler.
- Toujours vérifier le niveau de liquide de refroidissement dans le vase d'expansion (si présent), et non dans le radiateur (sauf si précisé autrement dans la section maintenance du manuel du moteur).
- Si le moteur est chaud et que le liquide doit être vérifié, opérer comme suivant.
- Mettre des lunettes de sécurité et des gants, placer un torchon sur le bouchon du radiateur.
- Dévisser le bouchon légèrement et laisser la vapeur s'échapper avant d'enlever le bouchon.

L'utilisation d'un groupe autonome à l'intérieur PEUT VOUS TUER EN QUELQUES MINUTES.

- Les fumées d'un groupe autonome contient du monoxyde de carbone. C'est un poison invisible et inodore.
- JAMAIS utiliser dans une maison ou garage, même avec les portes et fenêtres ouvertes.
- Uniquement utiliser à l'EXTERIEUR, loin des portes, fenêtres et bouches aération.

L'ACIDE DE LA BATTERIE peut provoquer des brûlures dans les YEUX et sur la PEAU.

- Ne pas renverser la batterie.
- Remplacer une batterie endommagée.
- Rincer immédiatement les yeux et la peau à l'eau.

LA CHALEUR DU MOTEUR peut provoquer un incendie.

- Ne pas placer l'appareil sur, au-dessus ou à proximité de surfaces inflammables.
- Tenir à distance les produits inflammables de l'échappement.

2-4. Dangers liés à l'hydraulique

Les ÉQUIPEMENTS HYDRAULIQUES peuvent provoquer des blessures ou même la mort.

- Une installation ou une utilisation incorrecte de cet appareil pourrait conduire à des dégâts matériels ou corporels. Seul un personnel qualifié est autorisé à installer, faire fonctionner et réparer cet appareil conformément à son manuel d'utilisation, aux normes industrielles et aux codes nationaux, d'état ou locaux.
- Ne pas dépasser le débit nominal ou la capacité de la pompe hydraulique ou de tout équipement du circuit hydraulique. Concevoir le circuit hydraulique de telle sorte que la défaillance d'un composant hydraulique ne risque pas de provoquer un accident matériel ou corporel.
- Avant d'intervenir sur le circuit hydraulique, couper l'alimentation électrique, verrouiller et étiqueter l'appareil, détendre la pression et s'assurer que le circuit hydraulique ne peut être remis sous pression par inadvertance.
- Ne pas intervenir sur le circuit hydraulique lorsque l'appareil fonctionne. Seul un personnel qualifié et appliquant les consignes du fabricant est autorisé le faire.
- Ne pas modifier ou altérer la pompe hydraulique ou les équipements fournis par le fabricant. Ne pas débrancher, désactiver ou neutraliser les équipements de sécurité du circuit hydraulique.
- Utiliser uniquement des composants et accessoires homologués par le fabricant.
- Se tenir à l'écart de tout point présentant un danger de pincement ou d'écrasement créé par l'équipement raccordé au circuit hydraulique.
- Ne pas intervenir sous ou autour d'un équipement qui n'est soutenu que par la pression hydraulique. Soutenir l'équipement de façon appropriée par un moyen mécanique.

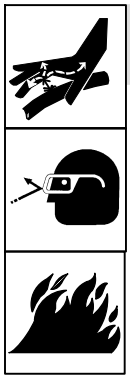

Le LIQUIDE HYDRAULIQUE risque de provoquer des blessures ou même la mort.

- Avant d'intervenir sur le circuit hydraulique, couper l'alimentation électrique, verrouiller et étiqueter l'appareil, détendre la pression et s'assurer que le circuit hydraulique ne peut être remis sous pression par inadvertance.
- Détendre la pression avant de débrancher ou de brancher des canalisations hydrauliques.
- Avant d'utiliser l'appareil, contrôler les composants du circuit hydraulique, les branchements et les flexibles en recherchant tout signe de détérioration, de fuite et d'usure.
- Pour intervenir sur un circuit hydraulique, porter un équipement de protection tel que des lunettes de sécurité, des gants de cuir, une chemise et un pantalon en tissu résistant, des chaussures montantes et une coiffe.
- Pour rechercher des fuites, utiliser un morceau de papier ou de carton, jamais les mains nues. En cas de détection de fuite, ne pas utiliser l'équipement.
- Le LIQUIDE HYDRAULIQUE est INFLAMMABLE. Ne pas intervenir sur des composants hydrauliques à proximité d'étincelles ou de flammes; ne pas fumer à proximité de liquide hydraulique.
- Remettre les portes, panneaux, recouvrements ou dispositifs de protection quand l'entretien est terminé et avant de mettre en marche l'appareil.
- En cas de pénétration d'un QUELCONQUE liquide dans la peau, celui–ci doit être retiré chirurgicalement sous quelques heures par un médecin familiarisé avec ce type de blessure, faute de quoi la gangrène pourrait apparaître.

Les PIÈCES MOBILES peuvent causer des blessures.

- S'abstenir de toucher des parties mobiles telles que des ventilateurs, courroies et rotors.
- Maintenir fermés et verrouillés les portes, panneaux, recouvrements et dispositifs de protection.
- Ne pas approcher les mains, cheveux, vêtements lâches et outils des organes mobiles.
- Avant d'intervenir sur le circuit hydraulique, couper l'alimentation électrique, verrouiller et étiqueter l'appareil, détendre la pression et s'assurer que le circuit hydraulique ne peut être remis sous pression par inadvertance.
- Demander seulement à un personnel qualifié d'enlever les dispositifs de sécurité ou les recouvrements pour effectuer, s'il y a lieu, des travaux d'entretien et de dépannage.
- Remettre en place les portes, panneaux, recouvrements ou dispositifs de protection à la fin des travaux d'entretien et avant de mettre le moteur en marche.

LES PIÈCES ET LIQUIDES CHAUDS peuvent provoquer des brûlures.

- Ne pas toucher les pièces chaudes à main nue ni laisser des liquides chauds entrer en contact avec la peau.
- Prévoir une période de refroidissement avant d'intervenir sur l'équipement.
- Ne pas toucher aux pièces chaudes, utiliser les outils recommandés et porter des gants de soudage et des vêtements épais pour éviter les brûlures.

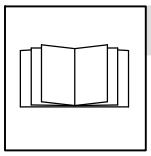

LIRE LES INSTRUCTIONS.

- Lire et appliquer les instructions sur les étiquettes et le Mode d'emploi avant l'installation, l'utilisation ou l'entretien de l'appareil. Lire les informations de sécurité au début du manuel et dans chaque section.
- N'utiliser que les pièces de rechange recommandées par le constructeur.
- Effectuer l'entretien en respectant les manuels d'utilisation, les normes industrielles et les codes nationaux, d'état et locaux.

2-5. Dangers liés à l'air comprimé

Un ÉQUIPEMENT PNEUMATIQUE risque de provoquer des blessures ou même la mort.

- Une installation ou une utilisation incorrecte de cet appareil pourrait conduire à des dégâts matériels ou corporels. Seul un personnel qualifié est autorisé à installer, utiliser et entretenir cet appareil conformément à son manuel d'utilisation, aux normes industrielles et aux codes nationaux, d'état ou locaux.
- Ne pas dépasser le débit nominal ou la capacité du compresseur ou de tout équipement du circuit d'air comprimé. Concevoir le circuit d'air comprimé de telle sorte que la défaillance d'un composant ne risque pas de provoquer un accident matériel ou corporel.
- Avant d'intervenir sur le circuit d'air comprimé, couper l'alimentation électrique, verrouiller et étiqueter l'appareil, détendre la pression et s'assurer que le circuit d'air ne peut être mis sous pression par inadvertance.
- Ne pas intervenir sur le circuit d'air comprimé lorsque l'appareil fonctionne. Seul un personnel qualifié est autorisé, et appliquant les consignes du fabricant.
- Ne pas modifier ou altérer le compresseur ou les équipements fournis par le fabricant. Ne pas débrancher, désactiver ou neutraliser les équipements de sécurité du circuit d'air comprimé.
- Utiliser uniquement des composants et accessoires homologués par le fabricant.
- Se tenir à l'écart de tout point présentant un danger de pincement ou d'écrasement créé par l'équipement raccordé au circuit d'air comprimé.
- Ne pas intervenir sous ou autour d'un équipement qui n'est soutenu que par la pression pneumatique. Soutenir l'équipement de façon appropriée par un moyen mécanique.

MÉTAL CHAUD provenant du découpage ou du gougeage à l'arc risque de provoquer un incendie ou une explosion.

- Ne pas découper ou gouger à proximité de produits inflammables.
- Attention aux risques d'incendie: tenir un extincteur à proximité.

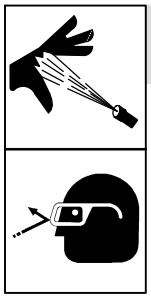

L'AIR COMPRIMÉ risque de provoquer des blessures ou même la mort.

- Avant d'intervenir sur le circuit d'air comprimé, couper l'alimentation électrique, verrouiller et étiqueter l'appareil, détendre la pression et s'assurer que le circuit d'air ne peut être mis sous pression par inadvertance.
- Détendre la pression avant de débrancher ou de brancher des canalisations d'air.
- Avant d'utiliser l'appareil, contrôler les composants du circuit d'air comprimé, les branchements et les flexibles en recherchant tout signe de détérioration, de fuite et d'usure.
- Ne pas diriger un jet d'air vers soi–même ou vers autrui.
- Pour intervenir sur un circuit d'air comprimé, porter un équipement de protection tel que des lunettes de sécurité, des gants de cuir, une chemise et un pantalon en tissu résistant, des chaussures montantes et une coiffe.
- Pour rechercher des fuites, utiliser de l'eau savonneuse ou un détecteur à ultrasons, jamais les mains nues. En cas de détection de fuite, ne pas utiliser l'équipement.
- Remettre les portes, panneaux, recouvrements ou dispositifs de protection quand l'entretien est terminé et avant de mettre en marche l'appareil.
- En cas d'injection d'air dans la peau ou le corps, demander immédiatement une assistance médicale.

L'INHALATION D'AIR COMPRIMÉ risque de provoquer des blessures ou même la mort.

- Ne pas inhaler d'air comprimé.
- Utiliser l'air comprimé uniquement pour découper ou gouger ainsi que pour l'outillage pneumatique.

Une PRESSION D'AIR RÉSIDUELLE ET DES FLEXIBLES QUI FOUETTENT risquent de provoquer des blessures.

- Détendre la pression pneumatique des outils et circuits avant d'entretenir, ajouter ou changer des accessoires et avant d'ouvrir le bouchon de vidange ou de remplissage d'huile du compresseur.

Les PIÈCES MOBILES peuvent causer des blessures.

- S'abstenir de toucher des parties mobiles telles que des ventilateurs, courroies et rotors.
- Maintenir fermés et verrouillés les portes, panneaux, recouvrements et dispositifs de protection.

- Ne pas approcher les mains, cheveux, vêtements lâches et outils des organes mobiles.
- Avant d'intervenir sur le circuit d'air comprimé, couper l'alimentation électrique, verrouiller et étiqueter l'appareil, détendre la pression et s'assurer que le circuit d'air ne peut être mis sous pression par inadvertance.
- Demander seulement à un personnel qualifié d'enlever les dispositifs de sécurité ou les recouvrements pour effectuer, s'il y a lieu, des travaux d'entretien et de dépannage.
- Remettre en place les portes, panneaux, recouvrements ou dispositifs de protection à la fin des travaux d'entretien et avant de mettre le moteur en marche.

DES PIÈCES CHAUDES peuvent provoquer des brûlures graves.

- Ne pas toucher de pièces chaudes du compresseur ou du circuit d'air.
- Prévoir une période de refroidissement avant d'intervenir sur l'équipement.

- Ne pas toucher aux pièces chaudes, utiliser les outils recommandés et porter des gants de soudage et des vêtements épais pour éviter les brûlures.

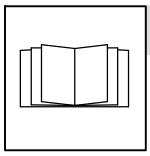

LIRE LES INSTRUCTIONS.

- Lire et appliquer les instructions sur les étiquettes et le Mode d'emploi avant l'installation, l'utilisation ou l'entretien de l'appareil. Lire les informations de sécurité au début du manuel et dans chaque section.

- N'utiliser que les pièces de rechange recommandées par le constructeur.
- Effectuer l'entretien en respectant les manuels d'utilisation, les normes industrielles et les codes nationaux, d'état et locaux.

2-6. Dangers supplémentaires en relation avec l'installation, le fonctionnement et la maintenance

Risque D'INCENDIE OU D'EXPLOSION.

- Ne pas placer l'appareil sur, au-dessus ou à proximité de surfaces inflammables.
- Ne pas installer l'appareil à proximité de produits inflammables.

- Ne pas surcharger l'installation électrique – s'assurer que l'alimentation est correctement dimensionnée et protégée avant de mettre l'appareil en service.

LA CHUTE DE L'ÉQUIPEMENT peut provoquer des blessures.

- Utiliser l'anneau de levage pour lever l'appareil et les accessoires correctement installées seuls, PAS les bouteilles de gaz. Ne pas dépasser le poids nominal maximal de l'œilleton (voir les spécifications).

- Utiliser un équipement de levage de capacité suffisante pour lever l'appareil.
- En utilisant des fourches de levage pour déplacer l'unité, s'assurer que les fourches sont suffisamment longues pour dépasser du côté opposé de l'appareil.
- Tenir l'équipement (câbles et cordons) à distance des véhicules mobiles lors de toute opération en hauteur.
- Suivre les consignes du Manuel des applications pour l'équation de levage NIOSH révisée (Publication Nº94–110) lors du levage manuelle de pièces ou équipements lourds.

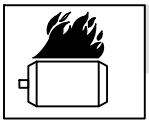

LE SURCHAUFFEMENT peut endommager le moteur électrique.

- Arrêter ou déconnecter l'équipement avant de démarrer ou d'arrêter le moteur.

- Ne pas laisser tourner le moteur trop lentement sous risque d'endommager le moteur électrique à cause d'une tension et d'une fréquence trop faibles.
- Ne pas brancher de moteur de 50 ou de 60 Hz à la prise de 100 Hz, s'il y a lieu.

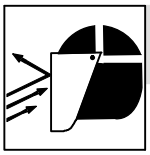

LES ÉTINCELLES PROJETÉES peuvent provoquer des blessures.

- Porter un écran facial pour protéger le visage et les yeux.
- Affûter l'électrode au tungstène uniquement à la meuleuse dotée de protecteurs. Cette manœuvre est à exécuter dans un endroit sûr lorsque l'on porte l'équipement homologué de protection du visage, des mains et du corps.

- Les étincelles risquent de causer un incendie – éloigner toute substance inflammable.

Les PIÈCES MOBILES peuvent causer des blessures.

- Ne pas s'approcher des organes mobiles.
- Ne pas s'approcher des points de coincement tels que des rouleaux de commande.

LES FILS DE SOUDAGE peuvent provoquer des blessures.

- Ne pas appuyer sur la gâchette avant d'en avoir reçu l'instruction.
- Ne pas diriger le pistolet vers soi, d'autres personnes ou toute pièce mécanique en engageant le fil de soudage.

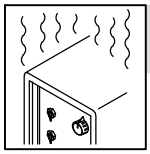

L'EMPLOI EXCESSIF peut SURCHAUFFER L'ÉQUIPEMENT.

- Laisser l'équipement refroidir ; respecter le facteur de marche nominal.
- Réduire le courant ou le facteur de marche avant de poursuivre le soudage.

- Ne pas obstruer les passages d'air du poste.

LES CHARGES ÉLECTROSTATIQUES peuvent endommager les circuits imprimés.

- Établir la connexion avec la barrette de terre avant de manipuler des cartes ou des pièces.
- Utiliser des pochettes et des boîtes antistatiques pour stocker, déplacer ou expédier des cartes de circuits imprimes.

UNE REMORQUE QUI BASCULE peut provoquer des blessures.

- Utiliser les supports de la remorque ou des blocs pour soutenir le poids.
- Installer convenablement le poste sur la remorque comme indiqué dans le manuel s'y rapportant.

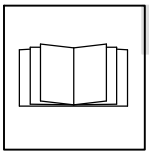

LIRE LES INSTRUCTIONS.

- Lire et appliquer les instructions sur les étiquettes et le Mode d'emploi avant l'installation, l'utilisation ou l'entretien de l'appareil. Lire les informations de sécurité au début du manuel et dans chaque section.
- N'utiliser que les pièces de rechange recommandées par le constructeur.
- Effectuer l'entretien en respectant les manuels d'utilisation, les normes industrielles et les codes nationaux, d'état et locaux.

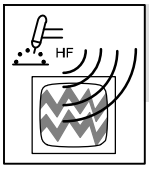

LE RAYONNEMENT HAUTE FRÉQUENCE (H.F.) risque de provoquer des interférences.

- Le rayonnement haute fréquence (H.F.) peut provoquer des interférences avec les équipements de radio−navigation et de communication, les services de sécurité et les ordinateurs.
- Demander seulement à des personnes qualifiées familiarisées avec des équipements électroniques de faire fonctionner l'installation.
- L'utilisateur est tenu de faire corriger rapidement par un électricien qualifié les interférences résultant de l'installation.
- Si le FCC signale des interférences, arrêter immédiatement l'appareil.
- Effectuer régulièrement le contrôle et l'entretien de l'installation.
- Maintenir soigneusement fermés les portes et les panneaux des sources de haute fréquence, maintenir les éclateurs à une distance correcte et utiliser une terre et un blindage pour réduire les interférences éventuelles.

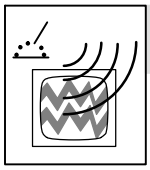

LE SOUDAGE À L'ARC risque de provoquer des interférences.

- L'énergie électromagnétique risque de provoquer des interférences pour l'équipement électronique sensible tel que les ordinateurs et l'équipement commandé par ordinateur tel que les robots.
- Veiller à ce que tout l'équipement de la zone de soudage soit compatible électromagnétiquement.
- Pour réduire la possibilité d'interférence, maintenir les câbles de soudage aussi courts que possible, les grouper, et les poser aussi bas que possible (ex. par terre).
- Veiller à souder à une distance de 100 mètres de tout équipement électronique sensible.
- Veiller à ce que ce poste de soudage soit posé et mis à la terre conformément à ce mode d'emploi.
- En cas d'interférences après avoir pris les mesures précédentes, il incombe à l'utilisateur de prendre des mesures supplémentaires telles que le déplacement du poste, l'utilisation de câbles blindés, l'utilisation de filtres de ligne ou la pose de protecteurs dans la zone de travail.

2-7. Proposition californienne 65 Avertissements

Les équipements de soudage et de coupage produisent des fumées et des gaz qui contiennent des produits chimiques dont l'État de Californie reconnaît qu'ils provoquent des malformations congénitales et, dans certains cas, des cancers. (Code de santé et de sécurité de Californie, chapitre 25249.5 et suivants)

Les batteries, les bornes et autres accessoires contiennent du plomb et des composés à base de plomb, produits chimiques dont l'État de Californie reconnaît qu'ils provoquent des cancers et des malformations congénitales ou autres problèmes de procréation. *Se laver les mains après manipulation.*

Ce produit contient des produits chimiques, notamment du plomb, dont l'État de Californie reconnaît qu'ils provoquent des cancers, des malformations congénitales ou d'autres problèmes de procréation. *Se laver les mains après utilisation.*

Pour les moteurs à essence :

Les gaz d'échappement des moteurs contiennent des produits chimiques dont l'État de Californie reconnaît qu'ils provoquent des cancers et des malformations congénitales ou autres problèmes de procréation.

Pour les moteurs diesel :

Les gaz d'échappement des moteurs diesel et certains de leurs composants sont reconnus par l'État de Californie comme provoquant des cancers et des malformations congénitales ou autres problèmes de procréation.

2-8. Principales normes de sécurité

Safety in Welding, Cutting, and Allied Processes, ANSI Standard Z49.1, from Global Engineering Documents (phone: 1-877-413-5184, website: www.global.ihs.com).

Safe Practices for the Preparation of Containers and Piping for Welding and Cutting, American Welding Society Standard AWS F4.1, from Global Engineering Documents (phone: 1-877-413-5184, website: www.global.ihs.com).

National Electrical Code, NFPA Standard 70, from National Fire Protection Association, Quincy, MA 02269 (phone: 1-800-344-3555, website: www.nfpa.org and www. sparky.org).

Safe Handling of Compressed Gases in Cylinders, CGA Pamphlet P-1, from Compressed Gas Association, 4221 Walney Road, 5th Floor, Chantilly, VA 20151 (phone: 703-788-2700, website:www.cganet.com).

Safety in Welding, Cutting, and Allied Processes, CSA Standard W117.2, from Canadian Standards Association, Standards Sales, 5060 Spectrum Way, Suite 100, Ontario, Canada L4W 5NS (phone: 800-463-6727, website: www.csa-international.org).

Battery Chargers, CSA Standard C22.2 NO 107.2–01, from Canadian Standards Association, Standards Sales, 5060 Spectrum Way, Suite 100, Ontario, Canada L4W 5NS (phone: 800-463-6727, website: www.csa-international.org).

Safe Practice For Occupational And Educational Eye And Face Protection, ANSI Standard Z87.1, from American National Standards Institute, 25 West 43rd Street, New York, NY 10036 (phone: 212-642-4900, website: www.ansi.org).

Standard for Fire Prevention During Welding, Cutting, and Other Hot Work, NFPA Standard 51B, from National Fire Protection Association, Quincy, MA 02269 (phone: 1-800-344-3555, website: www.nfpa.org.

For Standards about hydraulic systems, contact the National Fluid Power Association, Publications Department, 3333 North Mayfair Road, Suite 211, Milwaukee, WI 53222-3219 (phone: (414) 778-3344, website: www.nfpa.com).

OSHA, Occupational Safety and Health Standards for General Industry, Title 29, Code of Federal Regulations (CFR), Part 1910, Subpart Q, and Part 1926, Subpart J, from U.S. Government Printing Office, Superintendent of Documents, P.O. Box 371954, Pittsburgh, PA 15250-7954 (phone: 1-866-512-1800) (there are 10 OSHA Regional Offices—phone for Region 5, Chicago, is 312-353-2220, website: www.osha.gov).

U.S. Consumer Product Safety Commission (CPSC), 4330 East West Highway, Bethesda, MD 20814 (phone: 301-504-7923, website: www.cpsc.gov).

Applications Manual for the Revised NIOSH Lifting Equation, The National Institute for Occupational Safety and Health (NIOSH), 1600 Clifton Rd, Atlanta, GA 30333 (phone: 1-800-232-4636, website: www.cdc.gov/NIOSH).

2-9. Informations relatives aux CEM

Le courant électrique qui traverse tout conducteur génère des champs électromagnétiques (CEM) à certains endroits. Le courant de soudage crée un CEM autour du circuit et du matériel de soudage. Les CEM peuvent créer des interférences avec certains implants médicaux comme des stimulateurs cardiaques. Des mesures de protection pour les porteurs d'implants médicaux doivent être prises: par exemple, des restrictions d'accès pour les passants ou une évaluation individuelle des risques pour les soudeurs. Tous les soudeurs doivent appliquer les procédures suivantes pour minimiser l'exposition aux CEM provenant du circuit de soudage:

1. Rassembler les câbles en les torsadant ou en les attachant avec du ruban adhésif ou avec une housse.
2. Ne pas se tenir au milieu des câbles de soudage. Disposer les câbles d'un côté et à distance de l'opérateur.
3. Ne pas courber et ne pas entourer les câbles autour de votre corps.
4. Maintenir la tête et le torse aussi loin que possible du matériel du circuit de soudage.
5. Connecter la pince sur la pièce aussi près que possible de la soudure.
6. Ne pas travailler à proximité d'une source de soudage, ni s'asseoir ou se pencher dessus.
7. Ne pas souder tout en portant la source de soudage ou le dévidoir.

En ce qui concerne les implants médicaux :

Les porteurs d'implants doivent d'abord consulter leur médecin avant de s'approcher des opérations de soudage à l'arc, de soudage par points, de gougeage, du coupage plasma ou de chauffage par induction. Si le médecin approuve, il est recommandé de suivre les procédures précédentes.

SECTION 3 – DEFINITIONS

3-1. Symbols And Definitions

	Stop Engine		Fast (Run, Weld/ Power)		Slow (Idle)		Start Engine
	Starting Aid (Preheat)		Battery (Engine)		Engine Oil Pressure		Engine Oil
	Check Injectors/ Pump		Check Valve Clearance		Fuel		Protective Earth (Ground)
+	Positive	—	Negative		Certified/Trained Mechanic		Welding Arc
A	Amperes	V	Volts				Remote
	Engine		Air Temperature Or Engine Temperature		Output		Alternating Current
	Stick (SMAW) Welding		Constant Current (CC)		FCAW Welding		TIG (GTAW) Welding
	Time	h	Hours	s	Seconds	1	Single Phase
3	Three Phase		Read Operator's Manual		Circuit Protection		Do Not Switch While Welding
	Electrode Connection		Work Connection		Engine-Driven, Three-Phase Alternator With Rectifier	Hz	Hertz
X	Duty Cycle	U_0	Rated No Load Voltage (Average)	U_2	Conventional Load Voltage	n	Rated Load Speed
n_1	Rated Idle Speed	n_0	Rated No Load Speed	I	Current	I_2	Rated Welding Current

SECTION 4 – SPECIFICATIONS

4-1. Weld, Power, And Engine Specifications

Welding Mode	Weld Output Range	Rated Welding Output	Maximum Open-Circuit Voltage	Auxiliary Power Rating	IP Rat-ing	Engine	Fuel Capacity
CC/DC Stick/TIG	20 – 400 A	**Stick** 325 A, 33 Volts DC 100% Duty Cycle 350A, 34 Volts DC 60% Duty Cycle **TIG** 350 A, 24 Volts DC 100% Duty Cycle 400 A, 26 Volts DC 40% Duty Cycle	85 VDC	**Generator** Single-Phase, 12 kVA/kW Peak, 10 kVA/kW, 84/42 A, Continuous 120/240 V AC, 60 Hz	23S	Mitsubishi Water–Cooled Four–Cylinder 24.4 HP Diesel Engine	11.5 gal (43.5 L)
CV/DC	14 – 40 V	350 A, 31.5 Volts DC 100% Duty Cycle	85 VDC				

4-2. Dimensions, Weights, And Operating Angles

Dimensions	
Height	32 in. (813 mm) 35-3/4 in. (908 mm) (to top of lift eye)
Width	26-1/4 in. (667 mm) (mtg. brackets turned in) 28-3/4 in. (730 mm) (mtg. brackets turned out)
Depth	56 in. (1422 mm)
A	56 in. (1422 mm)
B	54 in. (1372 mm)
C	52 in in. (1321 mm)
D	2 in. (51 mm)
E	26 in. (660 mm)
F	7/8 in. (22 mm)
G	27-3/4 in. (705 mm)
H	9/16 in. (14 mm) Dia. 4 Holes
Weight	
No fuel: 1018 lb (462 kg) w/ fuel: 1100 lb (499 kg)	
Lifting Eye Weight Rating: 1500 lb (680 kg) Maximum	

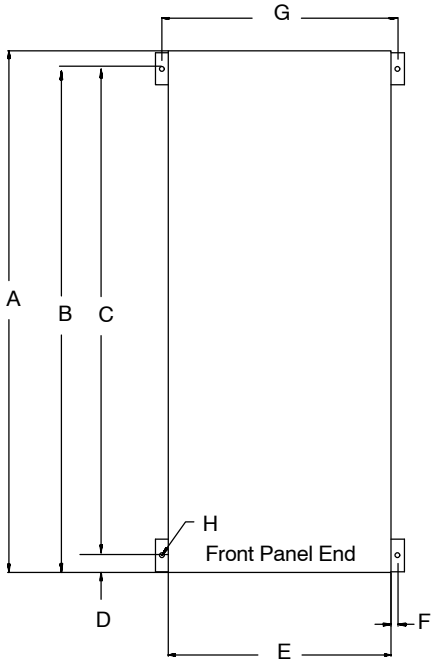

Do not exceed tilt angles or engine could be damaged or unit could tip.

Do not move or operate unit where it could tip.

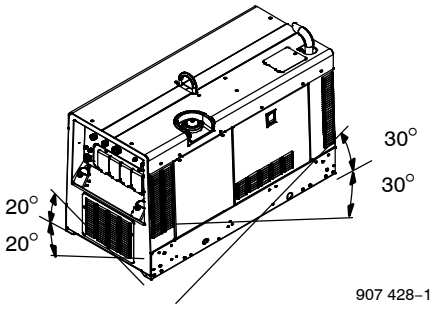

4-3. CC Volt-Ampere Curves

The volt-ampere curves show the minimum and maximum voltage and amperage output capabilities of the welding generator. Curves of all other settings fall between the curves shown.

A. Stick Mode

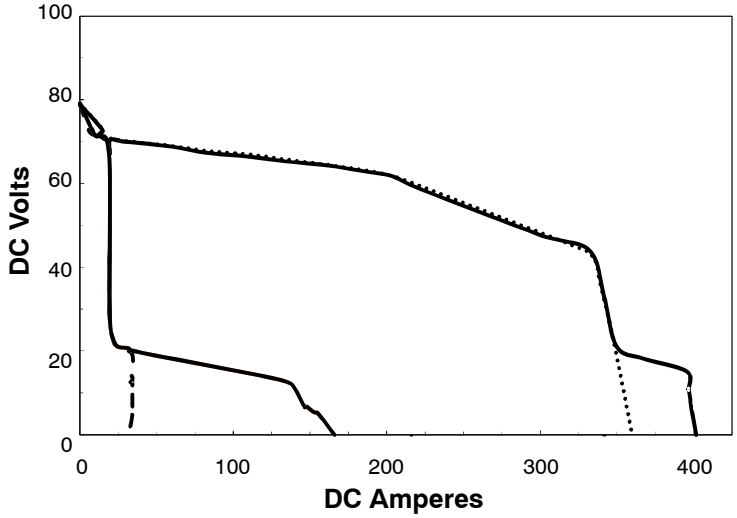

B. TIG Mode

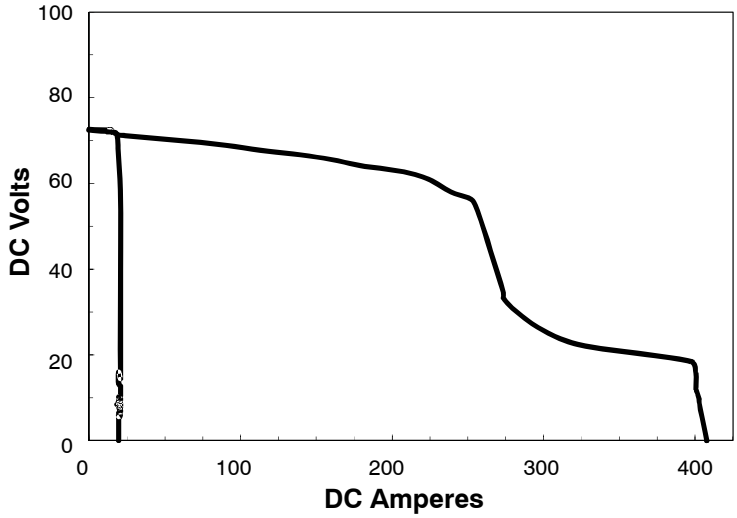

247 987-A / 247 988-A

4-4. Fuel Consumption

The curve shows typical fuel use under weld or power loads.

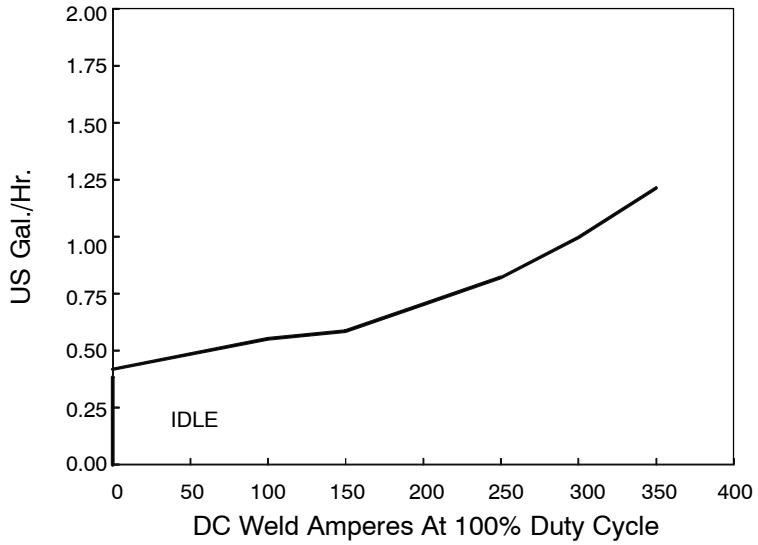

247 984-A

4-5. Duty Cycle And Overheating

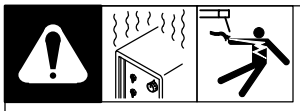

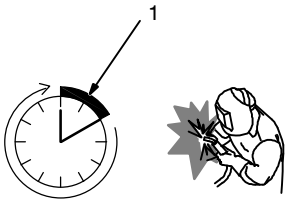

1 100% Duty Cycle

Duty Cycle is percentage of 10 minutes that unit can weld at rated load without overheating.

☞ *This unit is rated for welding at 325 amperes continuously.*

NOTICE *– Exceeding duty cycle can damage unit and void warranty.*

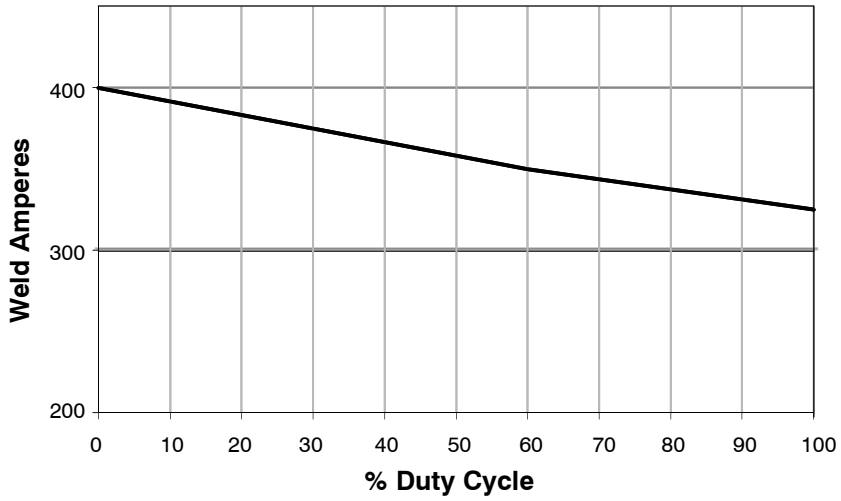

248 003–A

4-6. AC Generator Power Curve

The AC power curve shows the generator power in amperes.

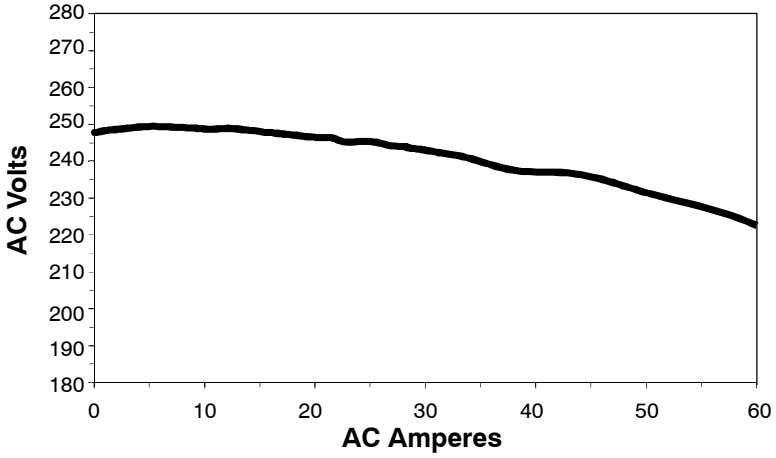

247 989-A

SECTION 5 – INSTALLATION

5-1. Serial Number And Rating Label Locations

The serial number and rating information for this product is located on the front. Use rating label to determine input power requirements and/or rated output. For future reference, write serial number in space provided on back cover of this manual.

5-2. Installing Welding Generator

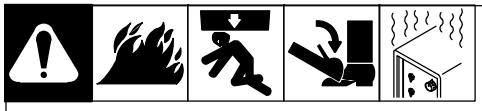

Movement

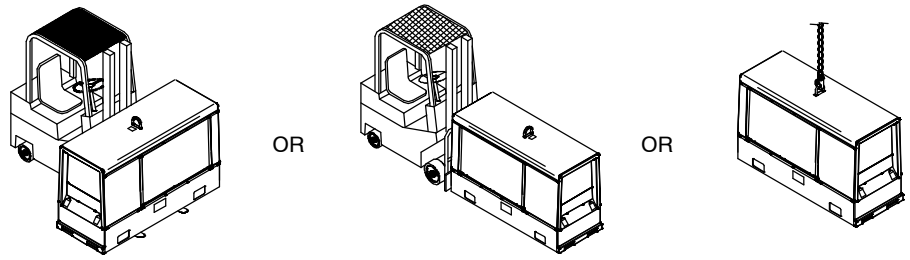

Location/Airflow Clearance

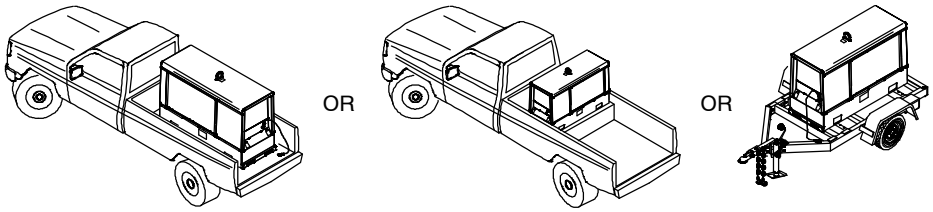

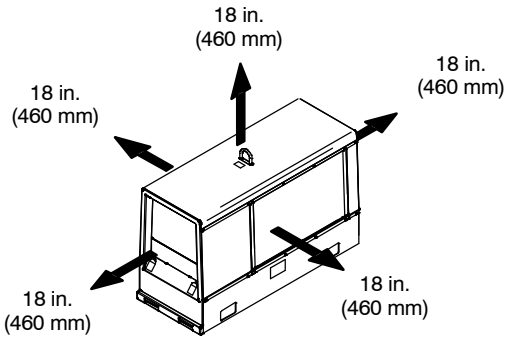

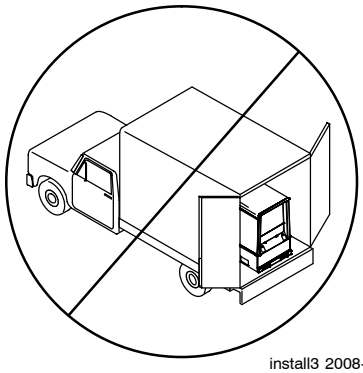

Do not move or operate unit where it could tip.

Always securely fasten welding generator onto transport vehicle or trailer and comply with all DOT and other applicable codes.

NOTICE *– Do not install unit where air flow is restricted or engine may overheat.*

☞ *See Section 4-2 for lifting eye rating.*

☞ *See Section 5-3 for mounting information.*

install3 2008-01 – Ref. 800 652 / Ref. 800 477-A / 803 274 / 804 712

5-3. Mounting Welding Generator

Supporting The Unit

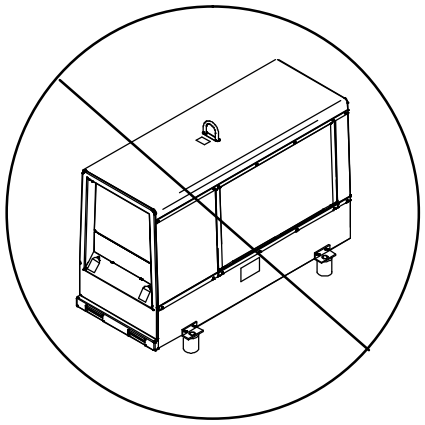

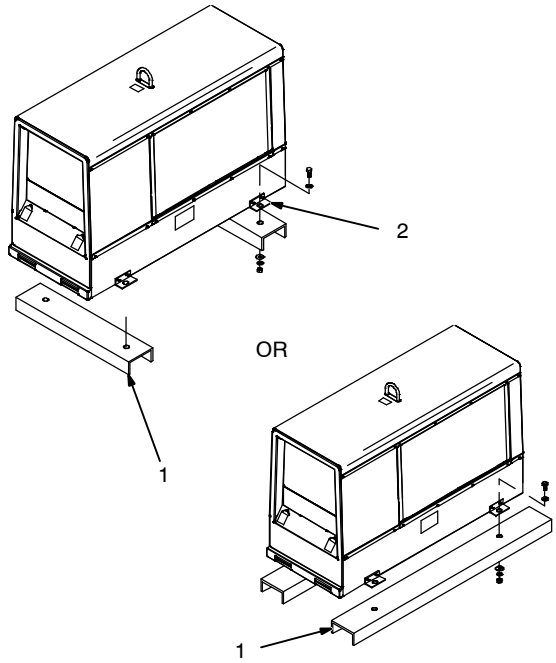

Using Mounting Brackets

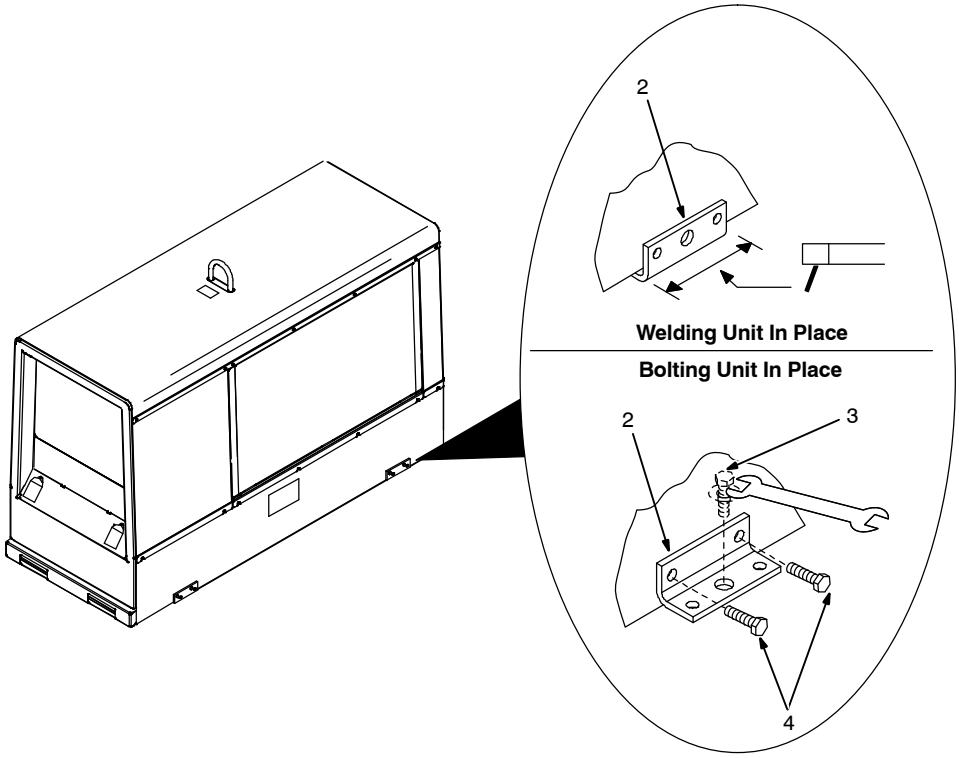

Tools Needed:

9/16 in.

Do not weld on base. Welding on base can cause fuel tank fire or explosion. Weld only on the four mounting brackets or bolt unit down.

NOTICE *– Do not mount unit by supporting the base only at the four mounting brackets. Use cross-supports to adequately support unit and prevent damage to base.*

Mounting Surface:

1 Cross-Supports

2 Mounting Brackets (Supplied)

Mount unit on flat surface or use cross-supports to support base. Secure unit with mounting brackets.

3 1/2 in. Bolt And Washer (Minimum – Not Supplied)

4 3/8-16 x 1 in. Screws (Supplied)

To Bolt Unit In Place:

Remove hardware securing the four mounting brackets to the base. Reverse brackets and reattach to base with original hardware.

Mount unit to truck or trailer with 1/2 in. (12 mm) or larger hardware (not supplied).

To Weld Unit In Place:

Weld unit to truck or trailer only at the four mounting brackets.

install3 2008--01 803 274 / 200 864-A / 803 231

5-4. Grounding Generator To Truck Or Trailer Frame

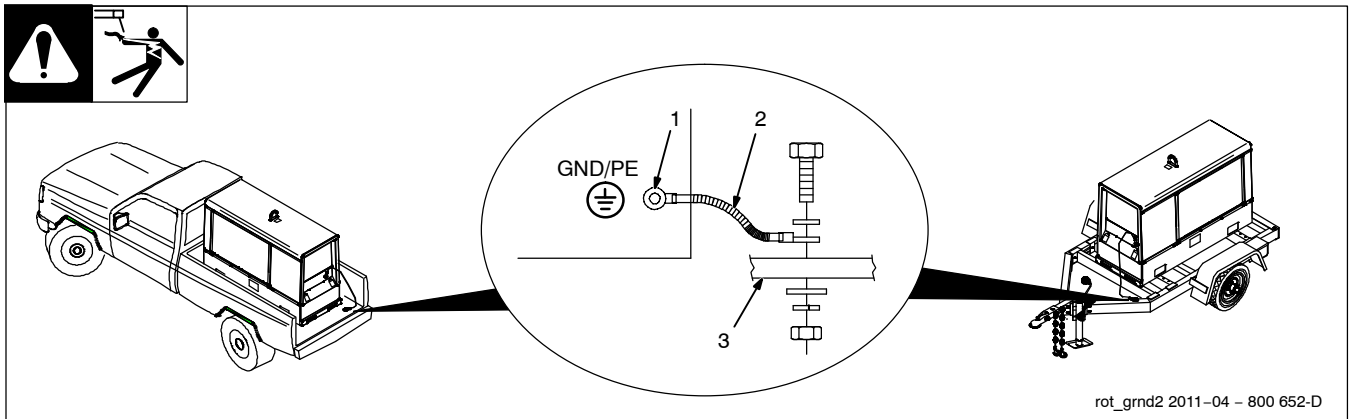

Always ground generator frame to vehicle frame to prevent electric shock and static electricity hazards.

Also see AWS Safety & Health Fact Sheet No. 29, Grounding of Portable And Vehicle Mounted Welding Generators.

Bed liners, shipping skids, and some running gear insulate the welding generator from the vehicle frame. Always connect a ground wire from the generator equipment grounding terminal to bare metal on the vehicle frame as shown.

Use GFCI protection when operating auxiliary equipment. If unit does not have GFCI receptacles, use GFCI-protected extension cord.

1 Equipment Grounding Terminal (On Front Panel)
2 Grounding Cable (Not Supplied)
3 Metal Vehicle Frame

Connect cable from equipment ground terminal to metal vehicle frame. Use #8 AWG or larger insulated copper wire.

☞ *Electrically bond generator frame to vehicle frame by metal-to-metal contact.*

5-5. Installing Exhaust Pipe

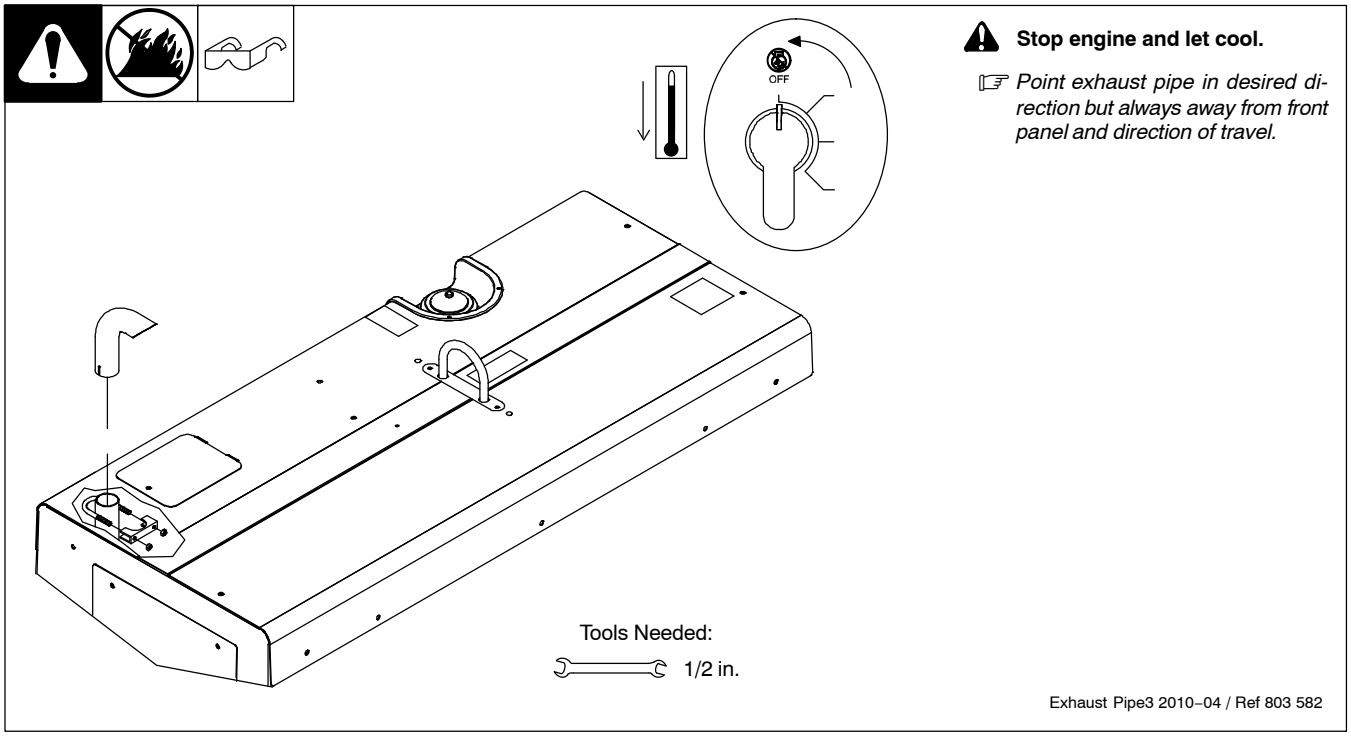

Stop engine and let cool.

☞ *Point exhaust pipe in desired direction but always away from front panel and direction of travel.*

5-6. Activating The Dry Charge Battery (If Applicable)

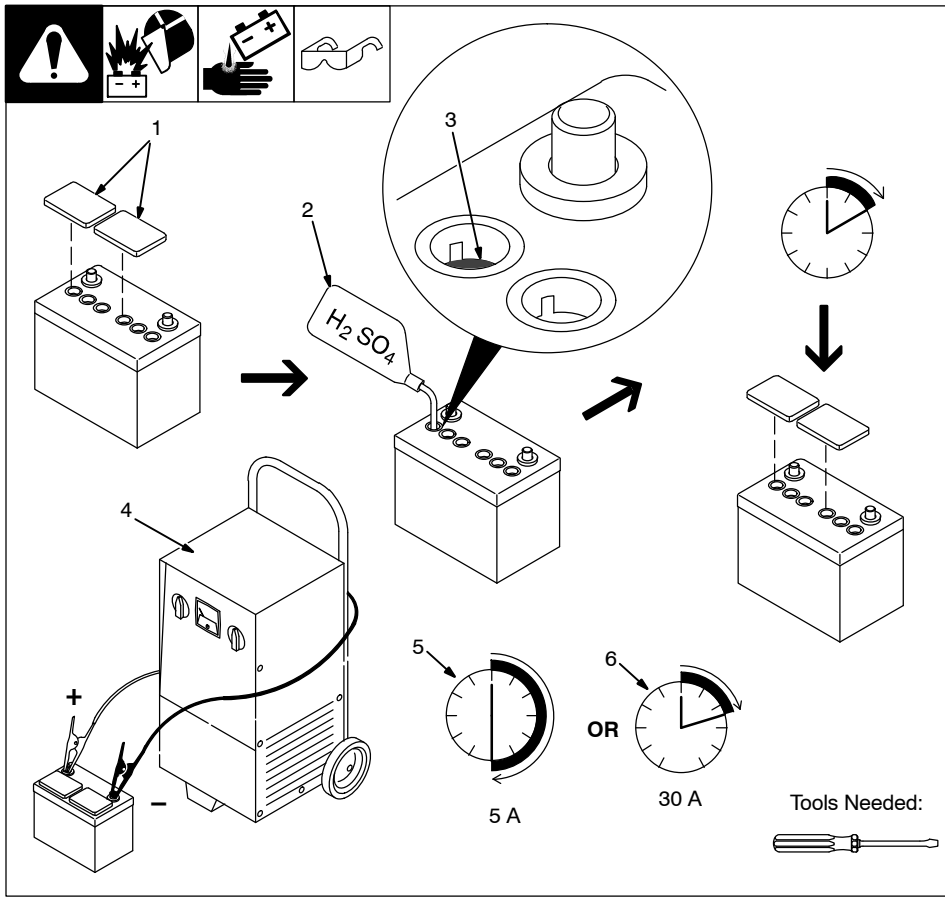

Always wear a face shield, rubber gloves and protective clothing when working on a battery.

Remove battery from unit.

1 Vent Caps

2 Sulfuric Acid Electrolyte (1.265 Specific Gravity)

3 Well

Fill each cell with electrolyte to **bottom** of well (maximum).

Do not overfill battery cells.

Wait ten minutes and check electrolyte level. If necessary, add electrolyte to raise to proper level. Reinstall vent caps.

4 Battery Charger

Read and follow all instructions supplied with battery charger.

5 5 Amperes For 30 Minutes Charge Time

6 30 Amperes For 12 Minutes Charge Time

Charge battery. Disconnect charging cables and install battery.

☞ *When electrolyte is low, add only distilled water to cells to maintain proper level.*

dry_batt2 2010–04 – S-0886

5-7. Connecting The Battery

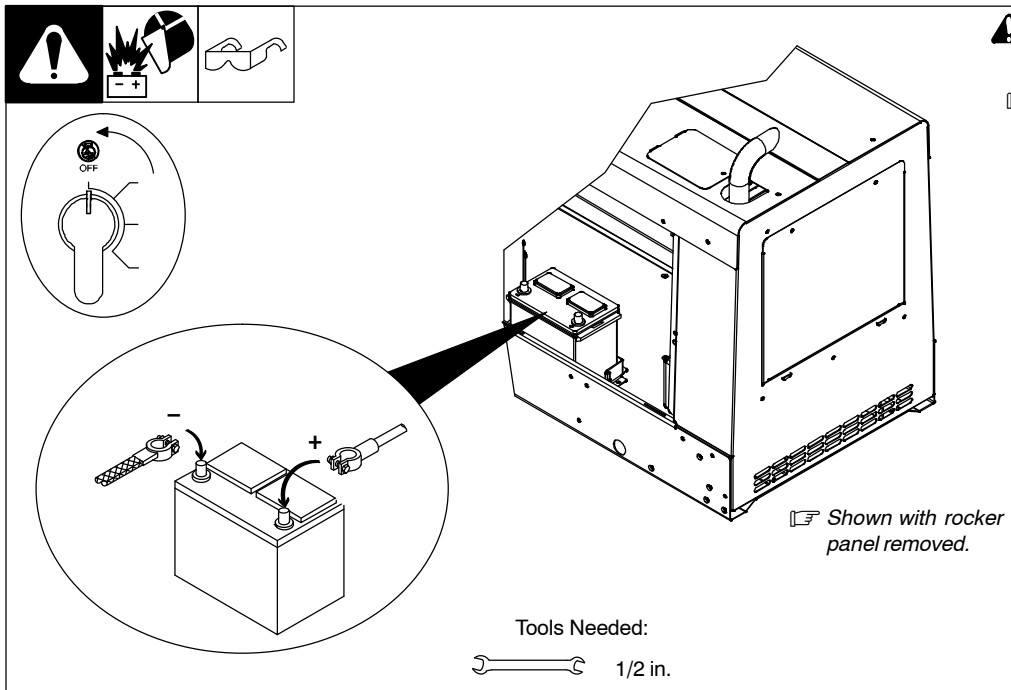

Connect negative (–) battery cable last.

☞ *Close door after connecting battery.*

☞ *Shown with rocker panel removed.*

Conn_Batt2 2010–04 / S-0756-C / 161-002

5-8. Engine Prestart Checks

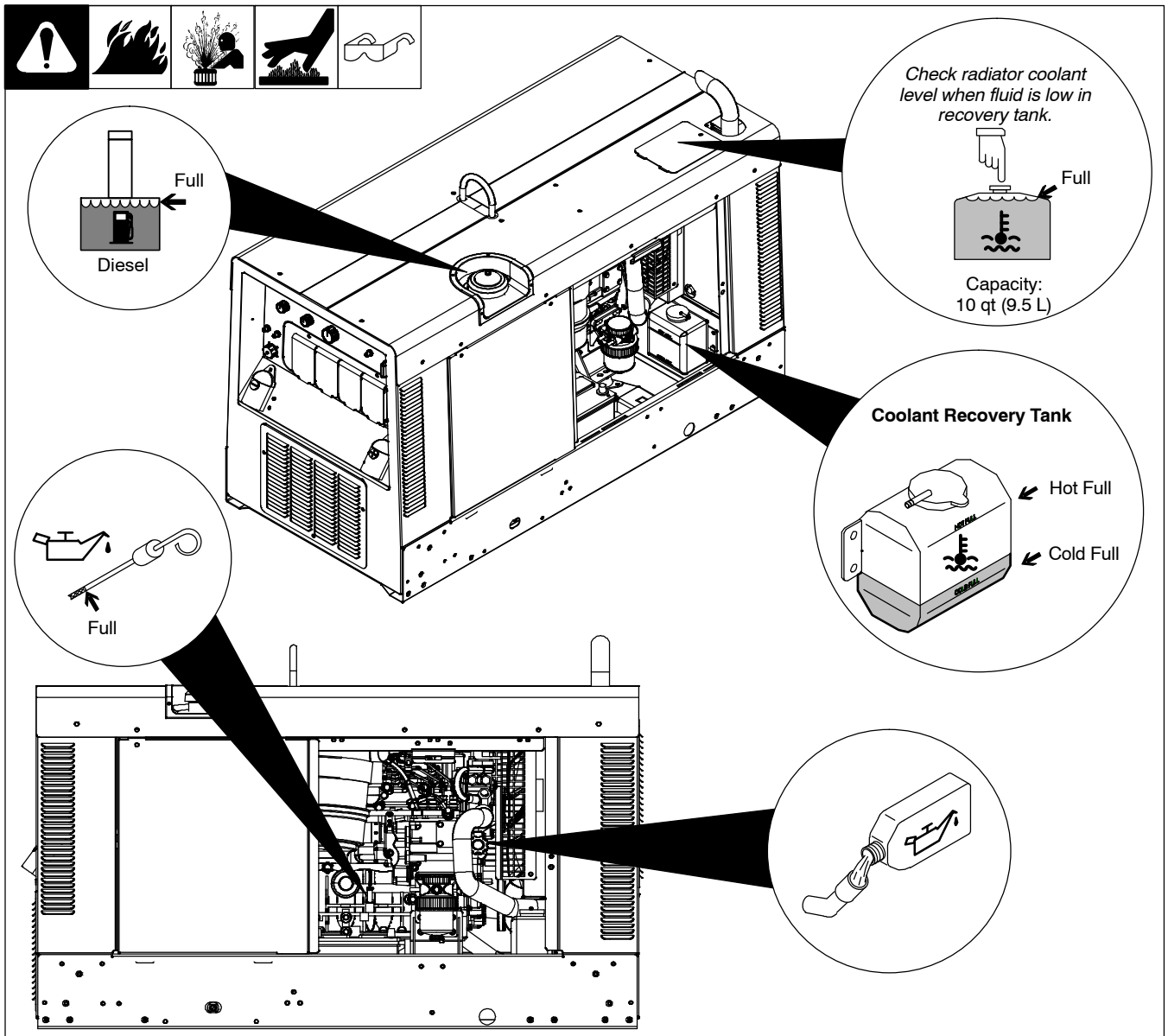

907 428–2 / 907 428–3

☞ *Check all engine fluids daily.*

Engine must be cold and on a level surface.

Automatic shutdown system stops engine if oil pressure is too low, coolant temperature is too high, or fuel level is low.

☞ *This unit has a low oil pressure shutdown switch. However, some conditions may cause engine damage before the engine shuts down. Check oil level often and do not use the oil pressure shutdown system to monitor oil level.*

Follow run-in procedure in engine manual. If unburned fuel and oil collect in exhaust pipe during run-in, see Section 10.

Fuel

NOTICE *– Do not use gasoline. Gasoline will damage engine.*

Add fresh diesel fuel before starting (see engine maintenance label for fuel specifications). Leave filler neck empty to allow room for expansion.

Engine stops if fuel level is low.

Oil

After fueling, check oil with unit on level surface. If oil is not up to full mark on dipstick, add oil (see maintenance label).

Coolant

Check coolant level in radiator before starting unit the first time. If necessary, add coolant to radiator until coolant level is at bottom of filler neck.

Check coolant level in recovery tank daily. If necessary, add coolant to recovery tank until coolant level is between Cold Full and Hot Full levels. If recovery tank coolant level was low, also check coolant level in radiator. Add coolant if level is below bottom of radiator filler neck.

Unit is shipped with an engine coolant mixture of water and ethylene glycol base antifreeze rated to –34° F (–37° C). Add antifreeze to mixture if using the unit in temperatures below –34° F (–37° C).

Keep radiator and air intake clean and free of dirt.

NOTICE *– Incorrect engine temperature can damage engine. Do not run engine without a properly working thermostat and radiator cap.*

☞ *To improve cold weather starting:*

Use Preheat switch (see Section 6-2).

Keep battery in good condition. Store battery in warm area.

Use fuel formulated for cold weather (diesel fuel can gel in cold weather). Contact local fuel supplier for fuel information.

Use correct grade oil for cold weather (see Section 8-1).

5-9. Weld Output Terminals

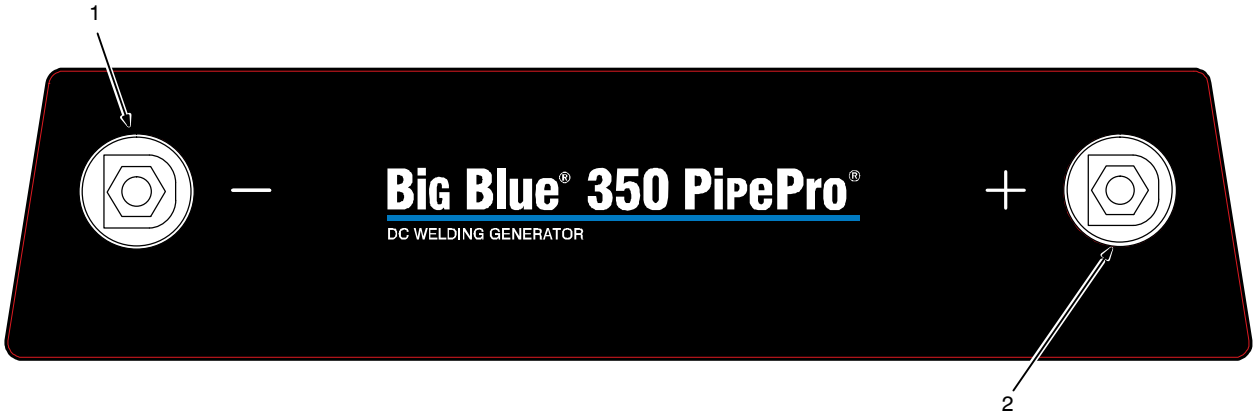

246 345

1 Negative (–) Weld Output Terminal

2 Positive (+) Weld Output Terminal

Use Process switch to select type of weld output (see Section 6-2).

Stick Welding

For Stick welding Direct Current Electrode Positive (DCEP), connect electrode holder cable to Positive (+) terminal and work cable to Negative (–) terminal.

For Direct Current Electrode Negative (DCEN), reverse cable connections.

TIG (GTAW) Welding

For TIG welding Direct Current Electrode Negative (DCEN), connect torch to Negative (–) terminal and work cable to Positive (+) terminal.

MIG And FCAW Welding

For MIG and FCAW welding Direct Current Electrode Positive (DCEP), connect wire feeder cable to Positive (+) terminal and work cable to Negative (–) terminal.

For Direct Current Electrode Negative (DCEN), reverse cable connections.

CAC-A Gouging

For CAC-A connect electrode holder cable to Positive (+) terminal and work cable to Negative (–) terminal.

5-10. Connecting To Weld Output Terminals

Tools Needed:

3/4 in.

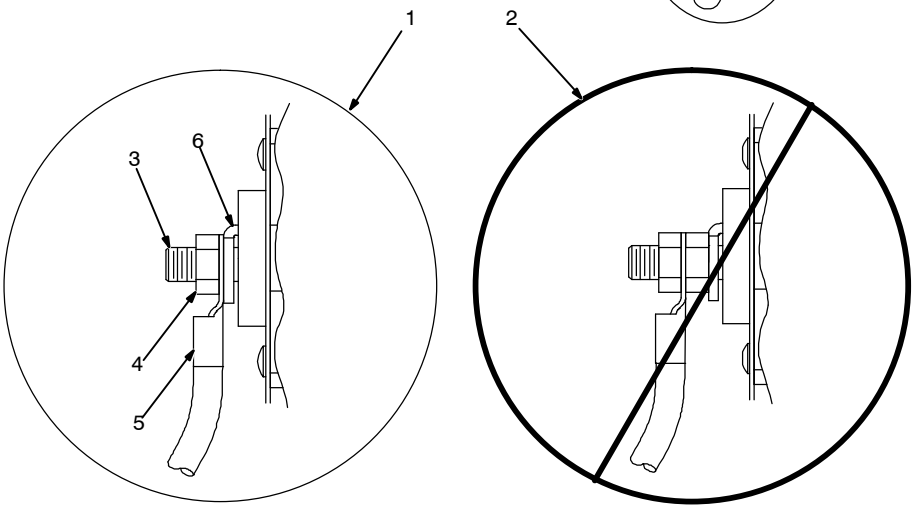

Stop engine.

Failure to properly connect weld cables may cause excessive heat and start a fire, or damage your machine.

Do not place anything between weld cable terminal and copper bar. Make sure that the surfaces of the weld cable terminal and copper bar are clean.

1 Correct Weld Cable Connection

2 Incorrect Weld Cable Connection

3 Weld Output Terminal

4 Supplied Weld Output Terminal Nut

5 Weld Cable Terminal

6 Copper Bar

Remove supplied nut from weld output terminal. Slide weld cable terminal onto weld output terminal and secure with nut so that weld cable terminal is tight against copper bar.

803 778-B

5-11. Selecting Weld Cable Sizes*

NOTICE *– The Total Cable Length in Weld Circuit (see table below) is the combined length of both weld cables. For example, if the power source is 100 ft (30 m) from the workpiece, the total cable length in the weld circuit is 200 ft (2 cables x 100 ft). Use the 200 ft (60 m) column to determine cable size.*

Weld Output Terminals

Stop engine before connecting to weld output terminals.

Do not use worn, damaged, under-sized, or poorly spliced cables.

Welding Amperes	Weld Cable Size** and Total Cable (Copper) Length in Weld Circuit Not Exceeding***							
	100 ft (30 m) or Less		150 ft (45 m)	200 ft (60 m)	250 ft (70 m)	300 ft (90 m)	350 ft (105 m)	400 ft (120 m)
	10 – 60% Duty Cycle	60 – 100% Duty Cycle	10 – 100% Duty Cycle					
100	4 (20)	4 (20)	4 (20)	3 (30)	2 (35)	1 (50)	1/0 (60)	1/0 (60)
150	3 (30)	3 (30)	2 (35)	1 (50)	1/0 (60)	2/0 (70)	3/0 (95)	3/0 (95)
200	3 (30)	2 (35)	1 (50)	1/0 (60)	2/0 (70)	3/0 (95)	4/0 (120)	4/0 (120)
250	2 (35)	1 (50)	1/0 (60)	2/0 (70)	3/0 (95)	4/0 (120)	2 ea. 2/0 (2x70)	2 ea. 2/0 (2x70)
300	1 (50)	1/0 (60)	2/0 (70)	3/0 (95)	4/0 (120)	2 ea. 2/0 (2x70)	2 ea. 3/0 (2x95)	2 ea. 3/0 (2x95)
350	1/0 (60)	2/0 (70)	3/0 (95)	4/0 (120)	2 ea. 2/0 (2x70)	2 ea. 3/0 (2x95)	2 ea. 3/0 (2x95)	2 ea. 4/0 (2x120)
400	1/0 (60)	2/0 (70)	3/0 (95)	4/0 (120)	2 ea. 2/0 (2x70)	2 ea. 3/0 (2x95)	2 ea. 4/0 (2x120)	2 ea. 4/0 (2x120)

* This chart is a general guideline and may not suit all applications. If cable overheats, use next size larger cable.

**Weld cable size (AWG) is based on either a 4 volts or less drop or a current density of at least 300 circular mils per ampere.
( ) = mm^2 for metric use

***For distances longer than those shown in this guide, call a factory applications rep. at 920-735-4505 (Miller) or 1-800-332-3281 (Hobart).

Ref. S-0007-H 2011–05

5-12. Connecting To Remote 14 Receptacle RC14

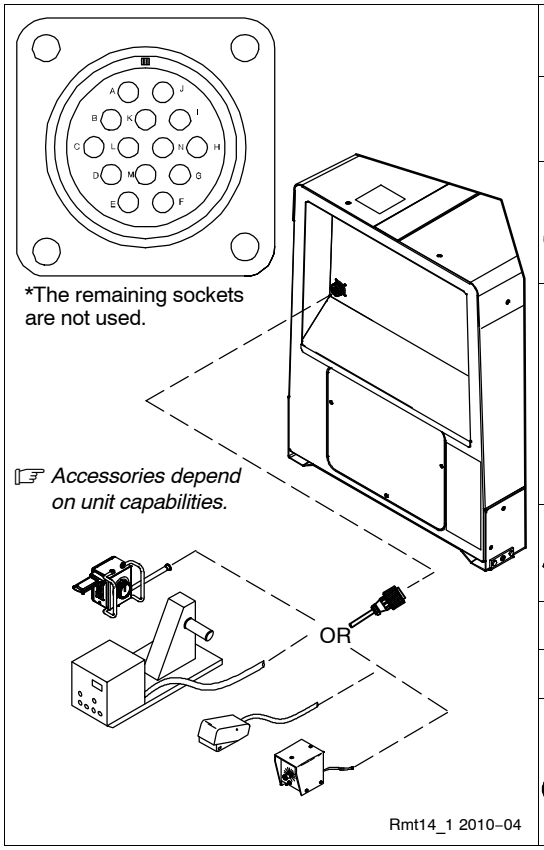

REMOTE 14	Socket*	Socket Information
Not all models have contactor control. See description of front panel controls and circuit diagram.		
24 VOLTS AC OUTPUT (CONTACTOR)	A	24 volts AC. Protected by supplementary protector.
	B	Contact closure to A completes 24 volt AC contactor control circuit.
REMOTE OUTPUT CONTROL	C	Output to remote control:+10 volts DC in MIG mode; 0 to +10 volts DC in Stick or TIG mode.
	D	Remote control circuit common.
	E	DC input command signal: 0 to +10 volts from min. to max. of remote control with Voltage/Amperage Adjust control at maximum.
A/V AMPERAGE VOLTAGE	F	Current feedback: 1 volt per 100 amperes.
	H	Voltage feedback: 1 volt per 10 arc volts.
GND	K	Chassis common.
NEUTRAL	G	Circuit common for 24 and 115 volt AC circuit.
115 VOLTS AC OUTPUT (CONTACTOR)	I	115 volts, 10 amperes, 60 Hz AC. Protected by supplementary protector.
	J	Contact closure to I completes 115 volt AC contactor control circuit.

Notes

Notes

MATERIAL THICKNESS REFERENCE CHART

24 Gauge (.025 in)

22 Gauge (.031 in)

20 Gauge (.037 in)

18 Gauge (.050 in)

16 Gauge (.063 in)

14 Gauge (.078 in)

1/8 in (.125 in)

3/16 in (.188 in)

1/4 in (.25 in)

5/16 in (.313 in)

3/8 in (.375 in)

1/2 in (.5 in)

6-1. Front Panel Controls (See Section 6-2)

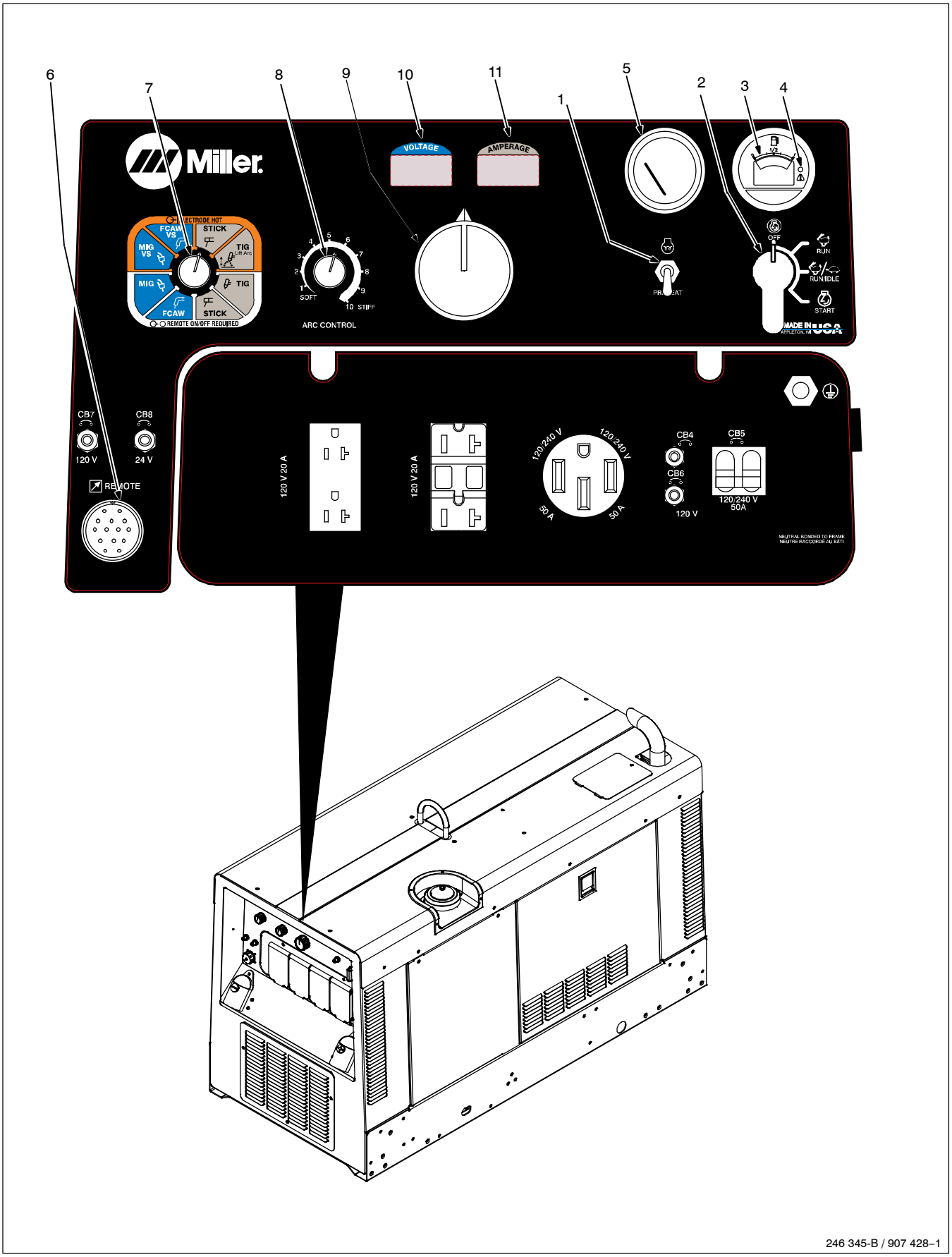

246 345-B / 907 428–1

6-2. Description Of Front Panel Controls (See Section 6-1)

Engine Starting Controls

1 Preheat Switch

Use switch to energize starting aid for cold weather starting (see starting instructions following).

2 Engine Control Switch

Use switch to start engine, select engine speed, and stop engine.

In Run position, engine runs at weld/power speed. In Run/Idle position, engine runs at idle speed at no load and weld speed with load applied.

To Start:

NOTICE *– Do not use ether.*

☞ *If engine does not start, let engine come to a complete stop before attempting restart.*

Above 32° F (0° C): turn Engine Control switch to Start. Release Engine Control switch when engine starts.

Below 32° F (0° C): turn engine control switch to Run position. Push Preheat switch up for 6 seconds. Turn Engine Control switch to Start. Release Engine Control switch and Preheat switch when engine starts.

☞ *Do not operate Preheat switch for more than 60 seconds at a time.*

To Stop: turn Engine Control switch to Off position.

Engine Gauges, Meters, And Lights

☞ *See Section 6-6 for complete fuel/hour gauge information.*

3 Fuel/Hour Gauge

Use gauge to check fuel level, total engine operating hours, or hours to oil change.

To check fuel level or engine hours when engine is not running, turn Engine Control switch to Run/Idle position.

4 Engine Indicator Light

Light goes on and engine stops if fuel is low, engine temperature exceeds 230° F (110° C) or engine oil pressure is below 10 psi (69 kPa).

☞ *Normal engine temperature is 180 - 203° F (82 - 95° C). Normal oil pressure is 30 - 60 psi (207 - 414 kPa).*

NOTICE *– Do not run engine until trouble is fixed.*

5 Engine Coolant Temperature Gauge

Normal temperature is 180 - 203° F (82 - 95° C). Engine stops if temperature exceeds 230° F (110° C).

Weld Controls

6 Remote Control Receptacle

Use receptacle to connect remote controls, wire feeders, and tools requiring 24 VAC or 120 VAC.

When a remote control is connected to the Remote receptacle, the Auto Sense Remote feature automatically switches voltage/amperage control to the remote control (see Section 6-5).

With remote control connected, weld output is determined by a combination of front panel and remote control voltage/amperage settings.

If no remote control is connected to the Remote receptacle, the front panel Voltage/Amperage control adjusts voltage and amperage.

☞ *If a remote device connected to Remote Receptacle RC14 is faulty or is disconnected during operation, the meters display Help 25 (see Section 8-10). Clear fault by stopping and restarting the unit or by turning Process/Contactor switch to another position.*

7 Process/Contactor Switch

See Section 6-3 for Process/Contactor switch information.

8 Dig/Inductance Control

Control adjusts Dig when Stick is selected on mode switch. When control is set toward minimum, short-circuit amperage at low arc voltage is the same as normal welding amperage.

When set toward maximum, short-circuit amperage is increased at low arc voltage to assist with arc starts and help prevent the electrode from sticking while welding (see volt-ampere curves in Section 4-3).

Select setting best suited for application.

Control adjusts inductance when MIG or FCAW position is selected on the mode switch. Inductance determines the “wetness” of the weld puddle. When set toward minimum, “wetness” (puddle fluidity) increases.

Control is not functional when one of the TIG modes is selected.

9 Voltage/Amperage Control

With Process/Contactor switch in any Stick or TIG setting, use control to adjust amperage. With Process/Contactor switch in any Wire (MIG) position, use control to adjust voltage. Control limits the remote amperage in Stick or TIG mode, but has no effect in Wire (MIG) modes.

Weld Meters

☞ *Weld meters also work in combination to display troubleshooting help codes (see Section 8-10).*

10 DC Voltmeter

Voltmeter displays preset voltage (MIG welding) with contactor off, and actual output voltage with the contactor on. Voltmeter displays voltage at the weld output terminals, but not necessarily the welding arc due to resistance of cable and connections.

To set voltage, turn Process/Contactor switch to MIG or FCAW position. Turn V/A control until desired voltage is displayed on Voltmeter. When welding is finished, voltmeter displays weld voltage and then defaults to preset voltage.

11 DC Ammeter

Ammeter displays preset amperage (Stick and TIG only) when not welding, and actual output amperage when welding.

To set amperage, turn Process/Contactor switch to Stick or TIG position. Turn V/A control until desired amperage is displayed on Ammeter. When welding is finished, ammeter displays weld amperage and then defaults to preset amperage.

6-3. Process/Contactor Switch

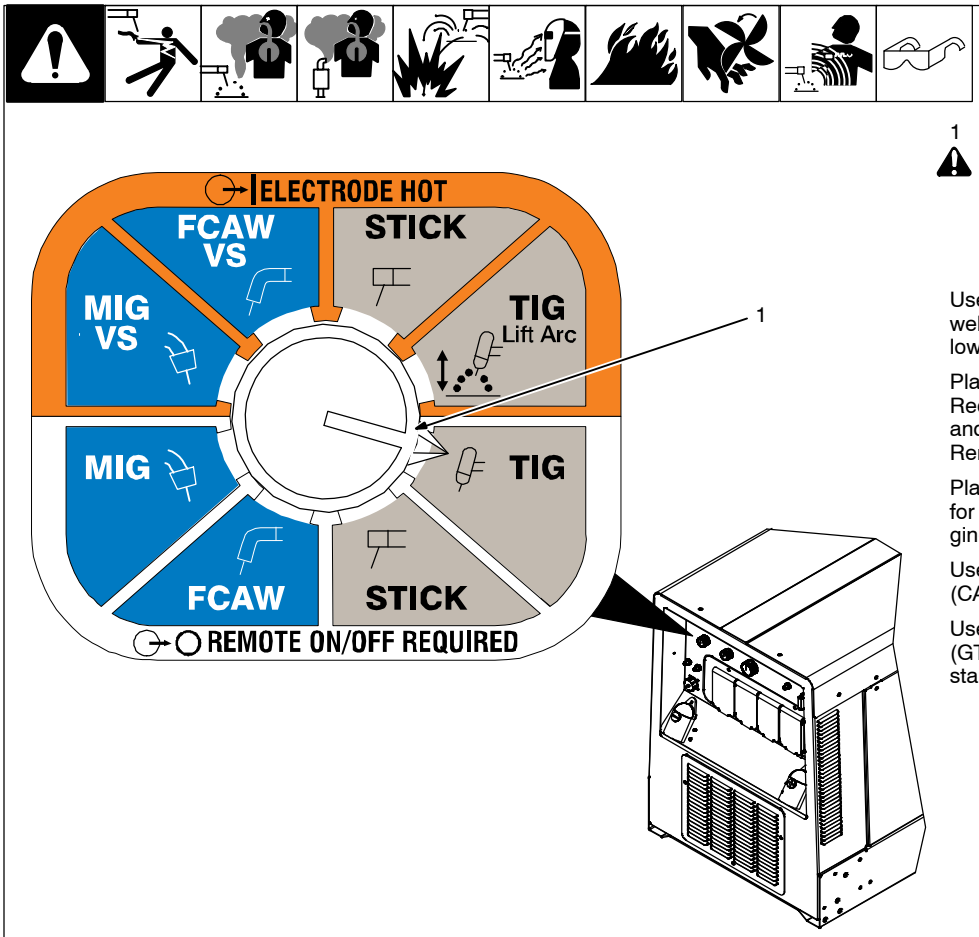

1 Process/Contactor Switch

Weld output terminals are energized when Process/Contactor switch is in an Electrode Hot position and the engine is running.

Use switch to select weld process and weld output on/off control (see table below).

Place switch in Remote On/Off Switch Required positions to turn weld output on and off with a device connected to the Remote 14 receptacle.

Place switch in Electrode Hot positions for weld output to be on whenever the engine is running.

Use Stick mode for air carbon arc (CAC-A) cutting and gouging.

Use the Lift-Arc TIG mode for TIG (GTAW) welding using the Lift-Arc TIG starting procedure (see Section 6-4).

Ref. 246 345-B / Ref. 907 428–1

	Switch Setting	Typical Process Applications (DC Only)
ELECTRODE HOT	Electrode Hot – MIG VS	MIG solid wire uses a voltage sensing (VS) feeder that does not require a control cable back to the welding generator.
	Electrode Hot – FCAW VS	FCAW (Flux Cored Arc Welding) uses a voltage sensing (VS) feeder that does not require a control cable back to the welding generator.
	Electrode Hot - Stick	Stick welding with or without a remote amperage control. Strike an arc to start welding.
	Electrode Hot – TIG Lift Arc	Lift Arc TIG: touch tungsten to work and lift to start welding. Uses circuitry internal to the welding generator to aid arc start. Can be used with or without a remote control.
REMOTE ON/OFF REQUIRED	Remote ON/OFF Required - TIG	High Frequency TIG or Scratch Start TIG welding. High frequency TIG starting with remote foot control allows remote On/Off and Amperage control. Another typical application is a simple TIG rig with a remote control device.
	Remote On/Off Required - Stick	Stick welding with RFC-14 control allows remote On/Off and Amperage control. This can help eliminate accidental arc strikes.
	Remote On/Off Required - FCAW	FCAW using a constant speed feeder. Use feeders with remote voltage control, or use a Spoolmatic 30A with WC 24 control.
	Remote On/Off Required - MIG	MIG solid wire using a constant speed feeder. Use feeders with remote voltage control, or use a Spoolmatic 30A with WC 24 control.

6-4. Lift-Arc™ TIG With Auto-Stop™

Arc Start With Lift-Arc

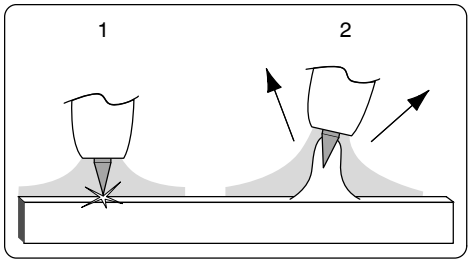

Arc End With Auto-Stop

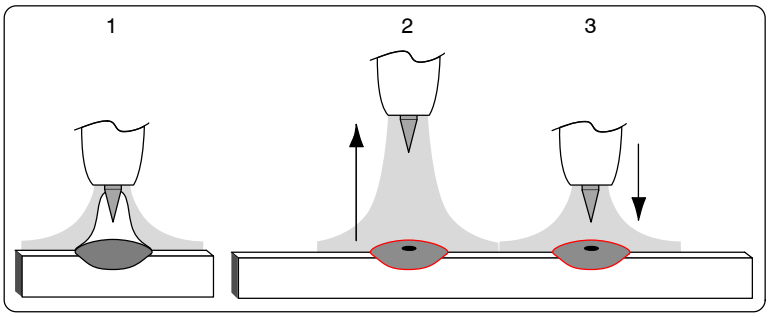

Arc Start With Lift-Arc TIG

Lift-Arc is used for the DCEN GTAW process when HF Start method is not permitted.

Select Lift-Arc TIG at Process/ Contactor switch.

Turn gas on.

1 Touch or scratch.

2 Lift at any angle.

Touch tungsten electrode to workpiece at weld start point. Slowly lift electrode. Arc is started when electrode is lifted.

Maintain shielding gas coverage and eliminate tungsten and work-piece contamination by using Auto-Stop to end the arc.

Arc End With Auto-Stop:

1 While welding.

2 Lift torch to start Auto-Stop. Arc stops.

3 Move torch back down to maintain gas coverage and prevent contamination.

WM Marketing

Notes

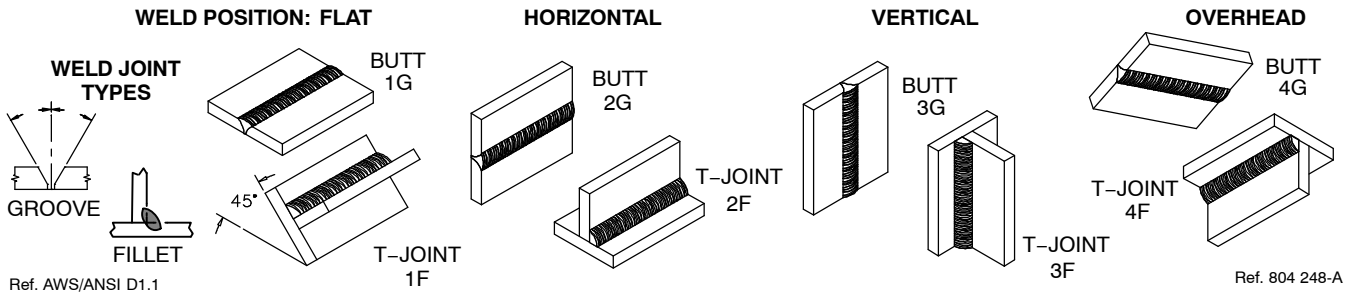

Ref. AWS/ANSI D1.1

Ref. 804 248-A

6-5. Remote Voltage/Amperage Control

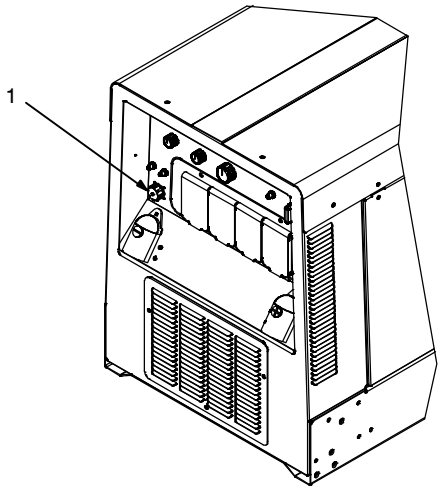

1 Remote 14 Receptacle RC14

Connect optional remote control to RC14 (see Section 5-12).

☞ *When a remote control is connected to the Remote receptacle, the Auto Sense Remote feature automatically switches voltage/amperage control to the remote control. When a device is connected to the Remote receptacle, remote voltage/amperage control is always available regardless of the position of the Process/Contactor switch.*

In Example:
Min = 20 A DC
Max = 205 A DC

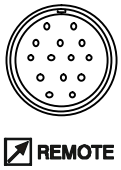

Connect Remote Control To Remote Receptacle RC14

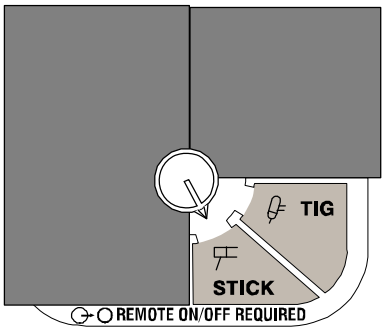

Set TIG or STICK Process

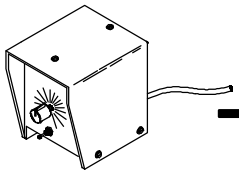

Turn Remote Control On. Adjust Optional Remote Control to 100%

Set V/A Control To Desired Maximum Weld Output Using Weld Meters

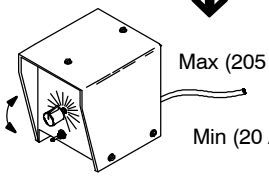

Adjust Optional Remote Control to desired weld output

Weld meters show preset output when not welding.

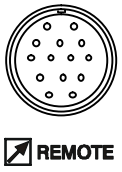

Connect Remote Control To Remote Receptacle RC14

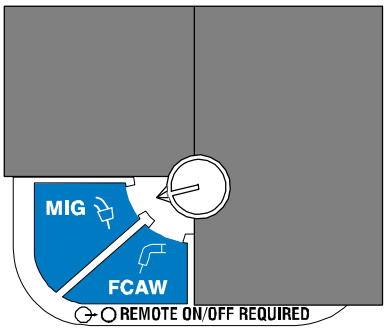

Set WIRE Process

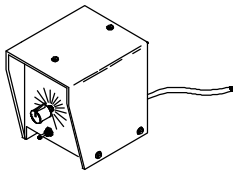

Adjust Optional Remote Control to desired weld output

0774 / Ref.246 345-B / Ref. 907 428–1

6-6. Fuel/Hour Gauge Descriptions

FUEL/HOUR GAUGE DESCRIPTIONS

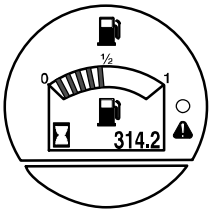

ENGINE HOURS: Gauge will display engine hours while engine is running. To display engine hours while the engine is off, place Engine Control switch in position “3”.

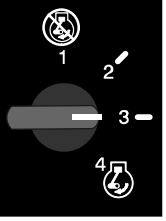

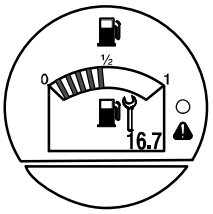

OIL CHANGE INTERVAL: Gauge will display hours remaining before oil change is due with Engine Control switch in position “2” (with engine off).

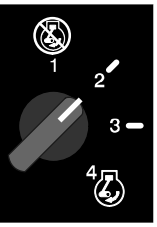

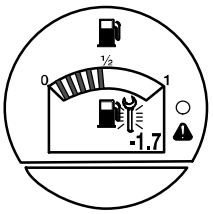

OIL CHANGE DUE: Gauge will display blinking wrench when oil change is due (0 to −99 hours).

To Reset: Toggle Engine Control switch between position “2” and “3” three times within 5 seconds (engine off).

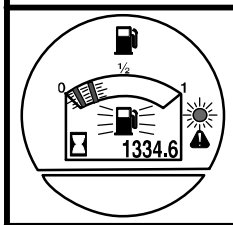

LOW FUEL PREWARNING: Fault indicator flashes when fuel level reaches 2 bars. Flashing rate increases as fuel level drops.
LOW FUEL: Fuel level low when fuel icon and last bar in fuel gauge blink.

To Reset: Refuel.

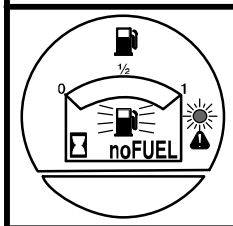

NO FUEL: Engine shuts down before fuel runs out. Display shows “noFuel”, and fuel icon and fault indicator flash.

To Reset: Refuel.

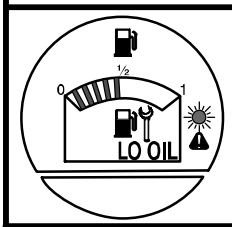

LOW OIL PRESSURE: Engine shuts down when oil pressure is low. Display shows “LO OIL”, fault indicator flashes and wrench is displayed.

To Reset: Place Engine Control switch in OFF position.

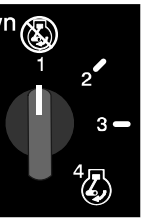

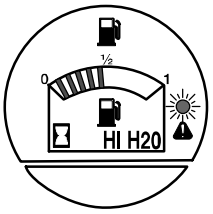

HIGH COOLANT TEMP: Engine shuts down when coolant temperature is high. Display shows “HI H2O” and fault indicator flashes.

To Reset: Place Engine Control switch in OFF position.

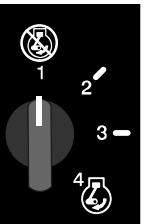

Note: Switch positions are numbered to illustrate that there are four switch positions. Actual graphics on front panel will vary.

238 650-B

6-7. Operating Engine Block Heater

NOTICE *–Do not run engine with coolant heater on (plugged in) or coolant heater will fail.*

Do not touch hot engine block. Engine block gets hot near heater.

☞ *Block heater specifications: 400 Watts, 3 Amperes at 115/120 Volts AC.*

1 Block Heater

Block heater is shown out of engine to clarify location.

2 Block Heater Plug

3 Block Heater Cord Exit Hole

Route heater cord through exit hole in base of unit.

4 120 VAC Grounded Receptacle

Use heater to maintain a constant engine coolant temperature. To turn heater on, plug into receptacle. To turn heater off, disconnect from receptacle.

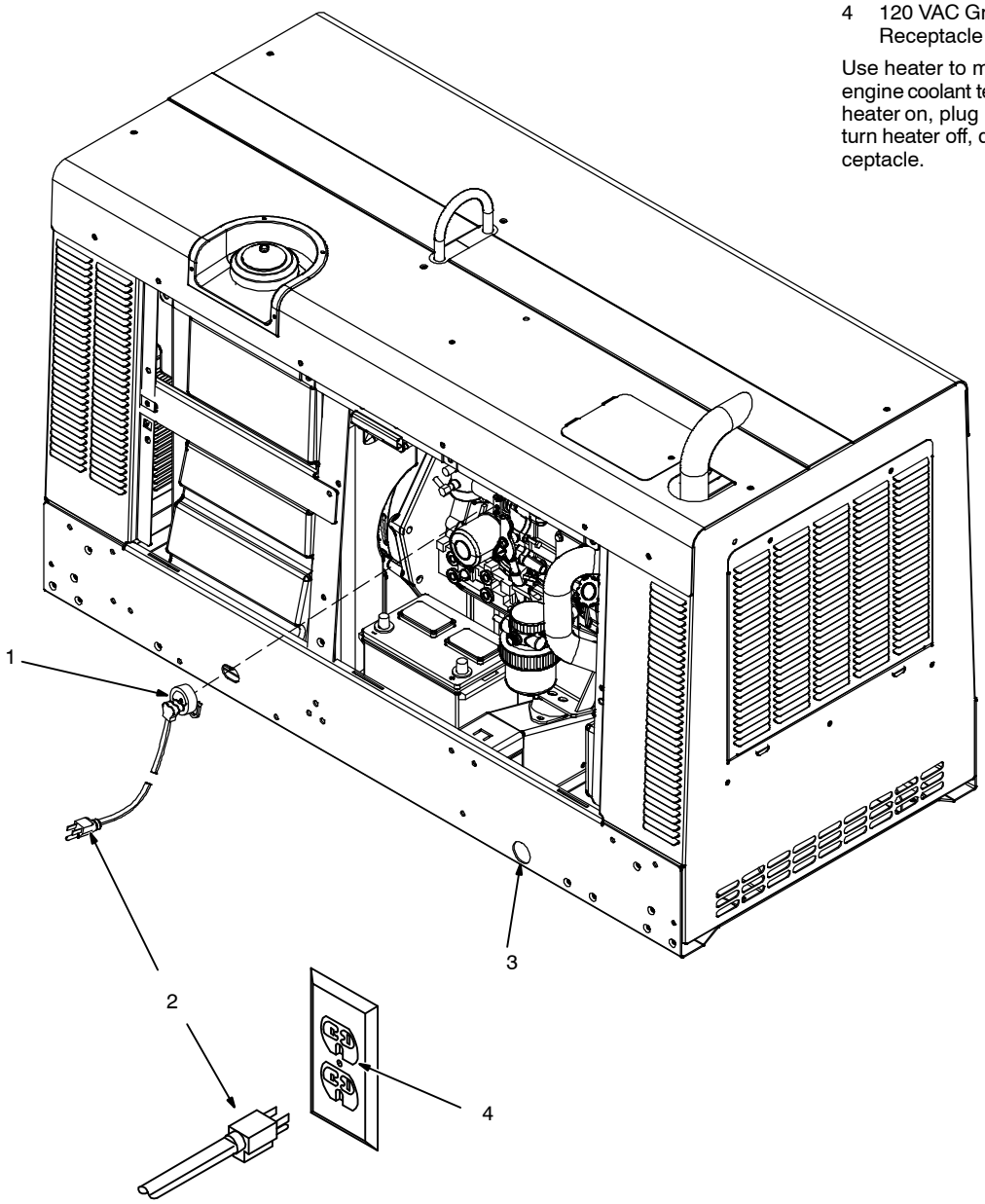

907 427–6–4A

7-1. Generator Power Receptacles

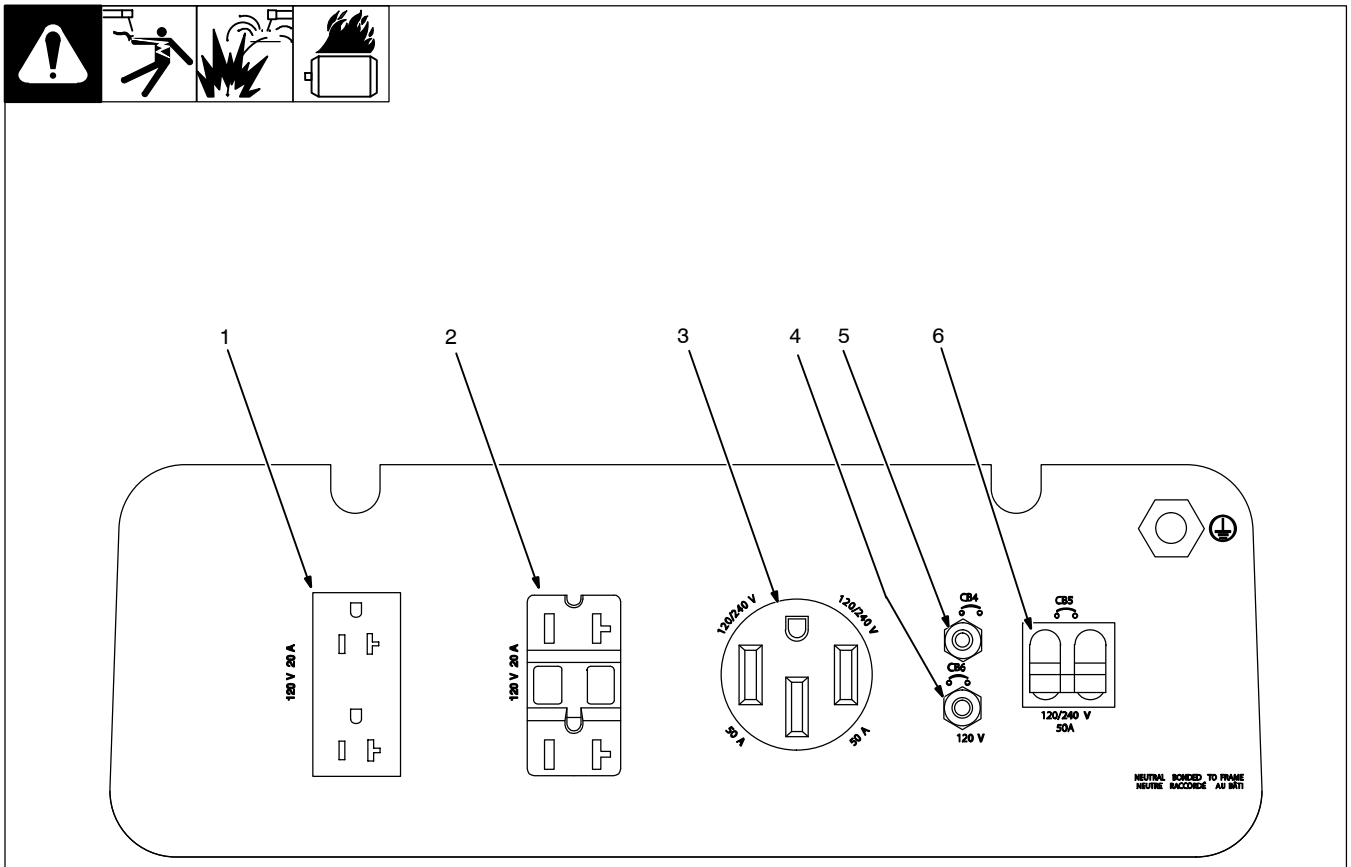

245 609

1 120 V 20 A AC Receptacle RC5

2 120 V 20 A AC GFCI Receptacle GFCI2

3 120/240 V 50 A AC Receptacle RC11

RC5 and GFCI2 supply 60 Hz single-phase power at weld/power speed.

Maximum output from each receptacle is 2.4 kVA/kW.

If a ground fault is detected, GFCI Reset button pops out and receptacle does not work. Check for faulty equipment plugged in receptacle. Press button to reset GFCI receptacle.

☞ *At least once a month, run engine at weld/power speed and press test button to verify GFCI is working properly.*

RC11 supplies 60 Hz single-phase power at weld/power speed. Maximum output from RC11 is 10 kVA/kW.

4 Supplementary Protector CB6

5 Supplementary Protector CB4

6 Supplementary Protector CB5

CB4 protects GFCI2 and CB6 protects RC5 from overload. If a supplementary protector opens, the receptacle does not work. Press button to reset.

Supplementary protector CB5 protects receptacles and the generator winding from overload. If CB5 opens, the receptacles do not work. Place CB5 switch in On position to reset circuit breaker.

☞ *If a supplementary protector continues to open, contact Factory Authorized Service Agent.*

☞ *Generator power decreases as weld output increases.*

Combined output of all receptacles is limited to the 10 kVA/kw rating of the generator.

EXAMPLE: If 15 A is drawn from each 120 V receptacle , only 26 A is available at the 240 V receptacle:

2 x (120 V x 15 A) + (240 V x 26 A) = 10.0 kVA/kW

8-1. Maintenance Label

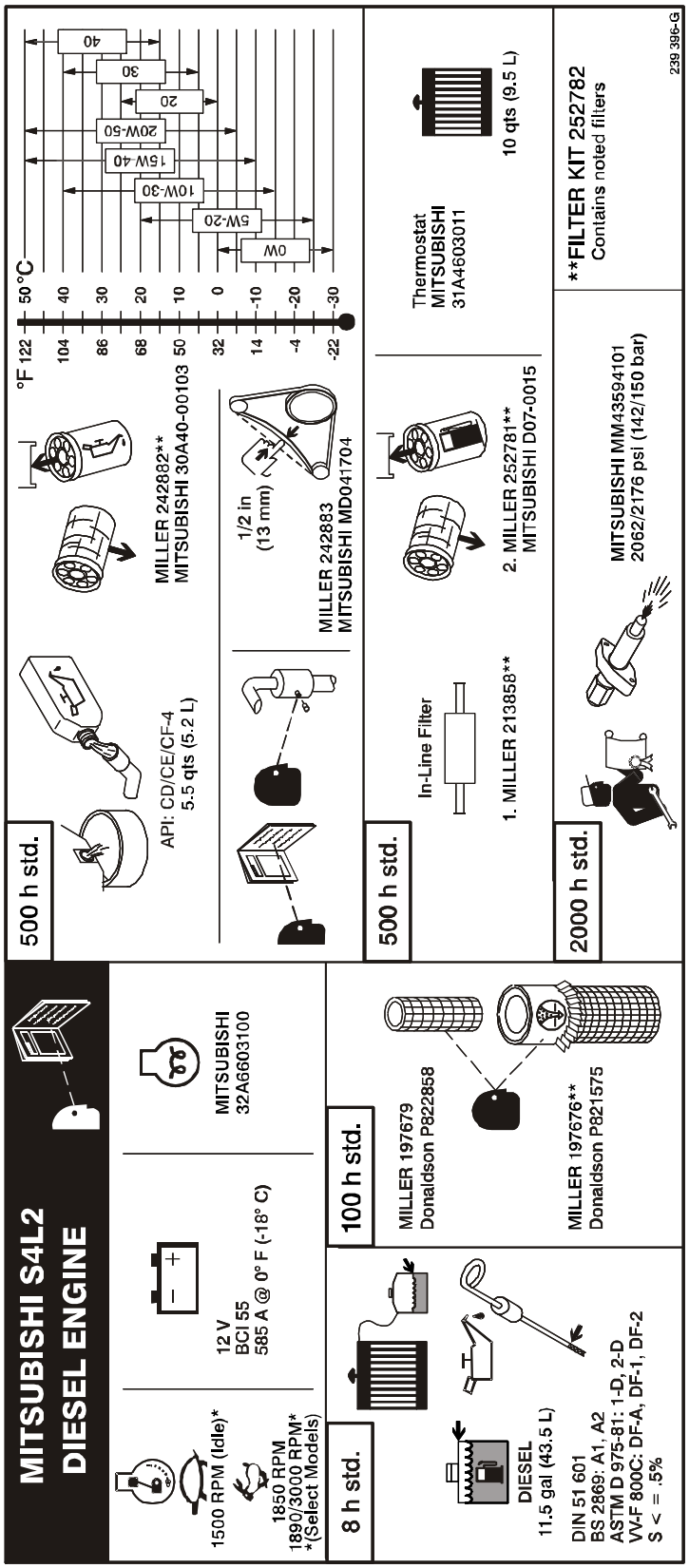

8-2. Routine Maintenance

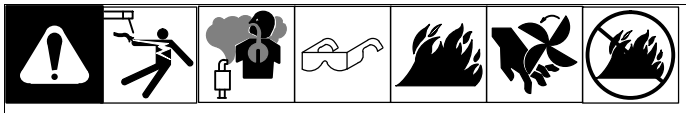

Recycle engine fluids.

Stop engine before maintaining.

See Engine Manual and Maintenance Label for important start-up, service, and storage information. Service engine more often if used in severe conditions.

	✓ = Check ◇ = Change ◯ = Clean ☆ = Replace * To be done by Factory Authorized Service Agent				Reference
Every **8** Hours	✓ Coolant Level	✓ Fuel Level	✓ Oil Level	◯ Oil, Fuel Spills	Section 5-8, 8-7
Every **50** Hours	◯ Weld Terminals				
Every **100** Hours	◯ Battery Terminals	✓ Air Cleaner Hoses	✓ Air Cleaner Element	☆ Unreadable Labels	Section 8-3
Every **500** Hours	✓☆ Weld Cables	1/2 in. (13 mm) ✓ Fan Belt Tension	***NOTICE*** *– Change engine oil and filter after initial 50 to 75 hours of use.* ◇ Oil ◇ Oil Filter	✓◯Spark Arrestor	Engine Manual, Section 8-5, 8-7
	◇ Inline Fuel Filter	◇ Fuel Filter	✓Radiator Thermostat		
Every **1000** Hours	✓Radiator Fluid Level	OR ◯ Inside Unit	✓Valve Clearance*	FUEL SLUDGE ◯ Drain Sludge	Section 5-8, 8-4, 8-6, 8-7, and Engine Manual
	✓◯ Slip Rings* ✓☆ Brushes*				
Every **2000** Hours	◯ Injectors*				
	◯ = Clean unit exterior, including stainless steel, frequently to prevent rust and corrosion.				

8-3. Servicing Air Cleaner

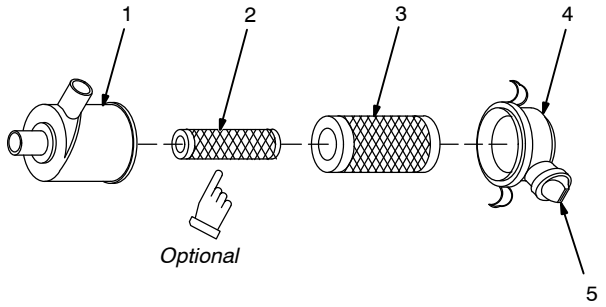

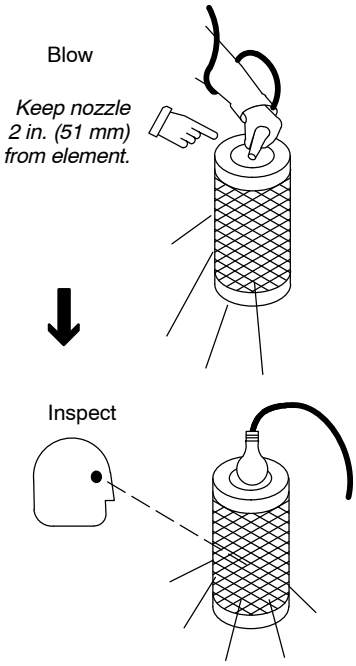

aircleaner1 2/01– ST-153 929-B / ST-153 585 / Ref. S-0698-B / Ref. 226 386-B

Stop engine.

NOTICE *– Do not run engine without air cleaner or with dirty element. Engine damage caused by using a damaged element is not covered by the warranty.*

☞ *The air cleaner primary element can be cleaned but the dirt holding capacity of the filter is reduced with each cleaning. The chance of dirt reaching the clean side of the filter while cleaning and the possibility of filter damage makes cleaning a risk. Consider the risk of unwarrantable equipment damage when determining whether to clean or replace the primary element.*

☞ *If you decide to clean the primary element, we strongly recommend installing an optional safety element to provide additional engine protection.* ***Never clean a safety element.*** *Replace the safety element after servicing the primary element three times.*

Clean or replace primary element if dirty (see note above before cleaning). **Replace** primary element if damaged. Replace primary element yearly or after six cleanings.

1 Housing

2 Safety Element (Optional)

3 Primary Element

4 Dust Cap

5 Dust Ejector

To clean air filter:

Wipe off cap and housing. Remove cap and dump out dust. Remove element(s). Wipe dust from inside cap and housing with damp cloth. Reinstall safety element (if present). Reinstall cap.

NOTICE *– Do not clean housing with air hose.*

Clean primary element with compressed air only.

Air pressure must not exceed 100 psi (690 kPa). Use 1/8 in. (3 mm) nozzle and keep nozzle at least 2 in. (51 mm) from inside of element. Replace primary element if it has holes or damaged gaskets.

Reinstall primary element and cap (dust ejector down).

8-4. Checking Generator Brushes

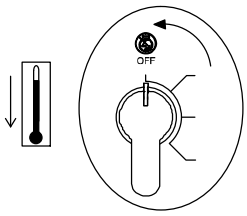

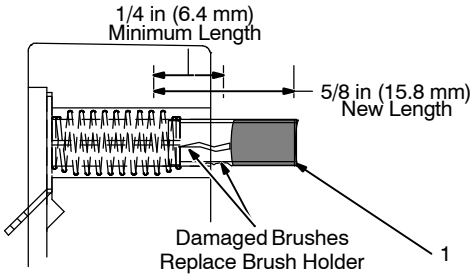

Stop engine and let cool.

1 Generator Brush

Remove brush holder assembly. Keep hardware for reinstallation.

Do not remove brushes from holder. Replace brush holder assembly if brushes are damaged, or are near minimum length.

Ref. 205 725 Mitsubishi

8-5. Inspecting And Cleaning Spark Arrestor Muffler

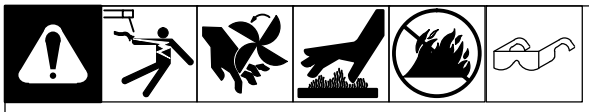

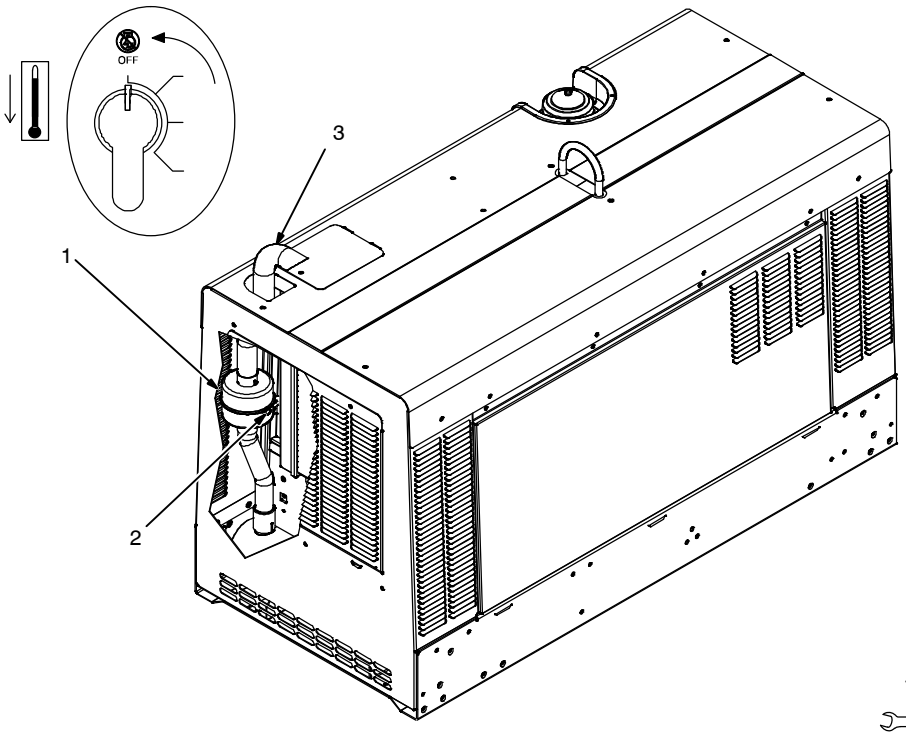

Stop engine and let cool.

1 Spark Arrestor Muffler

2 Cleanout Plug

Remove plug and remove any dirt covering cleanout hole.

3 Exhaust Pipe

Start engine and run at idle speed to blow out cleanout hole. If nothing blows out of hole, briefly cover end of exhaust pipe with fireproof material.

Stop engine and let cool.

Reinstall cleanout plug.

Tools Needed:

3/8 in.

907 427-2

8-6. Servicing Engine Cooling System

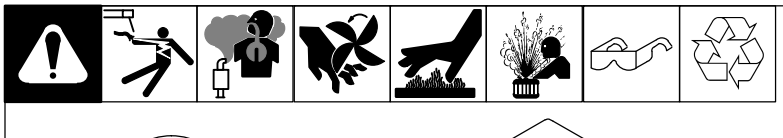

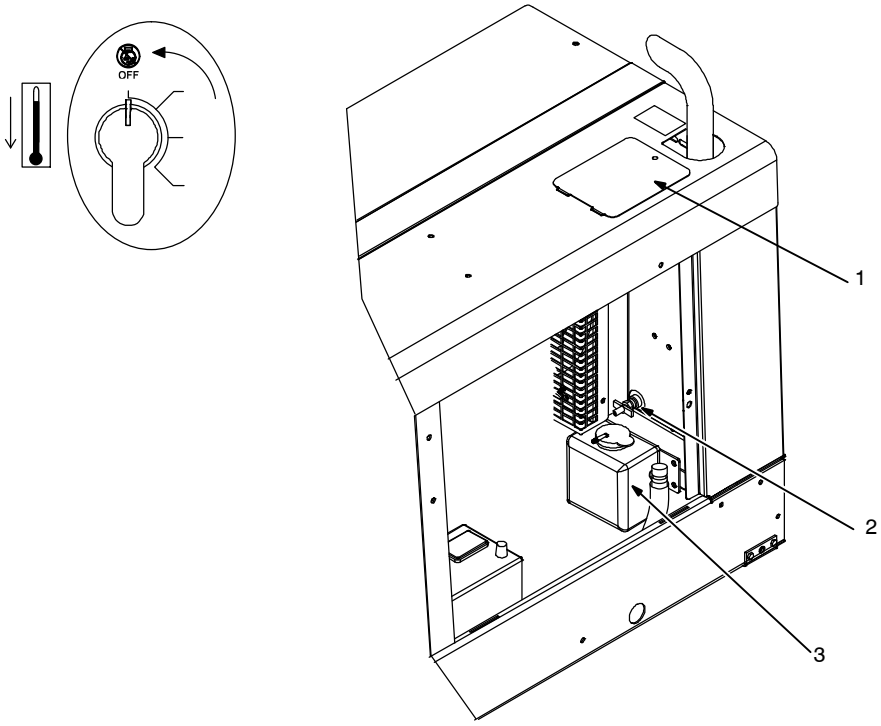

Stop engine and let cool.

1 Radiator Cap Cover

2 Radiator Draincock

3 Coolant Recovery Tank

Change coolant according to engine manual. Add coolant according to engine maintenance label.

Check coolant level in recovery tank daily. If necessary, add coolant to recovery tank until coolant level is between Cold Full and Hot Full levels. If recovery tank coolant level was low, also check coolant level in radiator. Add coolant if level is below bottom of radiator filler neck.

Coolant1 2010–04 / Ref. 907 427-6

8-7. Servicing Fuel And Lubrication Systems

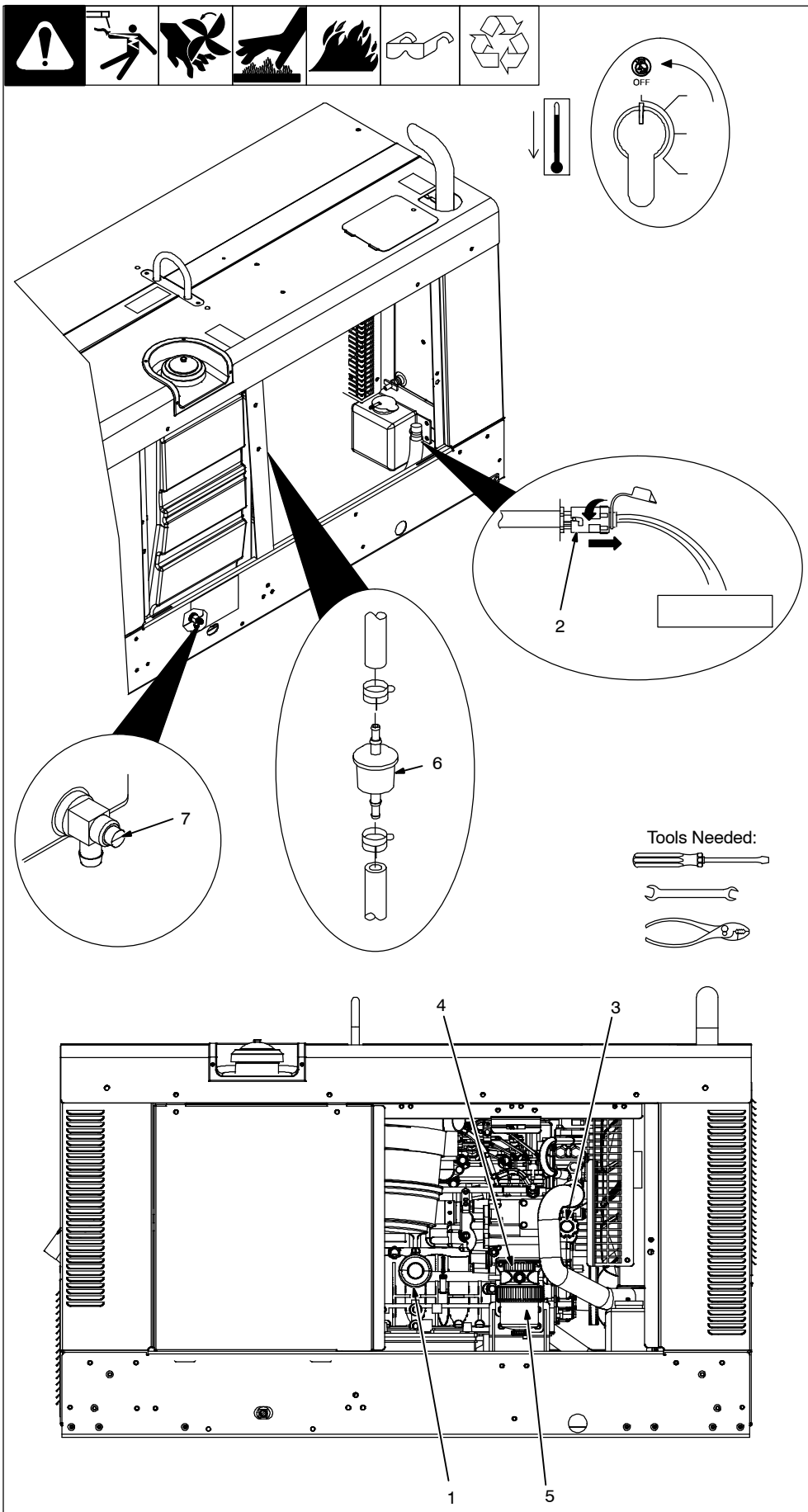

Stop engine and let cool.

After servicing, start engine and check for fuel leaks. Stop engine, tighten connections as necessary, and wipe up spilled fuel.

1 Oil Filter
2 Oil Drain Valve And Hose
3 Oil Fill Cap
4 Primary (Canister) Fuel Filter Location
5 Fuel Filter Retaining Ring
6 Secondary (In-Line) Fuel Filter
7 Fuel Tank Sludge Drain Valve

To change oil and filter:

Route oil drain hose and valve through hole in base. See engine manual and engine maintenance label for oil/filter change information.

To replace primary (canister) fuel filter:

Turn filter retaining ring counterclockwise to remove. Pull filter straight down to remove.

Fill new filter with fresh fuel. Apply thin coat of fuel to gasket on new filter. Install new filter and reinstall retaining ring.

Inspect fuel lines, and replace if cracked or worn.

To drain water from fuel system:

See engine manual.

To replace secondary (in-line) fuel filter:

Note direction of fuel flow as indicated by arrow on side of filter. Remove fuel line clamps and disconnect fuel lines from fuel filter. Replace filter, reconnect fuel lines, and reinstall clamps.

To drain sludge from fuel tank:

Beware of fire. Do not smoke and keep sparks and flames away from drained fuel. Dispose of drained fuel in an environmentally-safe manner. Do not leave unit unattended while draining fuel tank.

Properly lift unit and secure in a level position. Use adequate blocks or stands to support unit while draining fuel tank.

Attach 1/2 ID hose to drain valve. Put metal container under drain, and use screwdriver to open sludge drain valve. Close valve when sludge has drained. Remove hose.

Close door.

Ref. 804 009–C / 907 428–3

8-8. Overload Protection

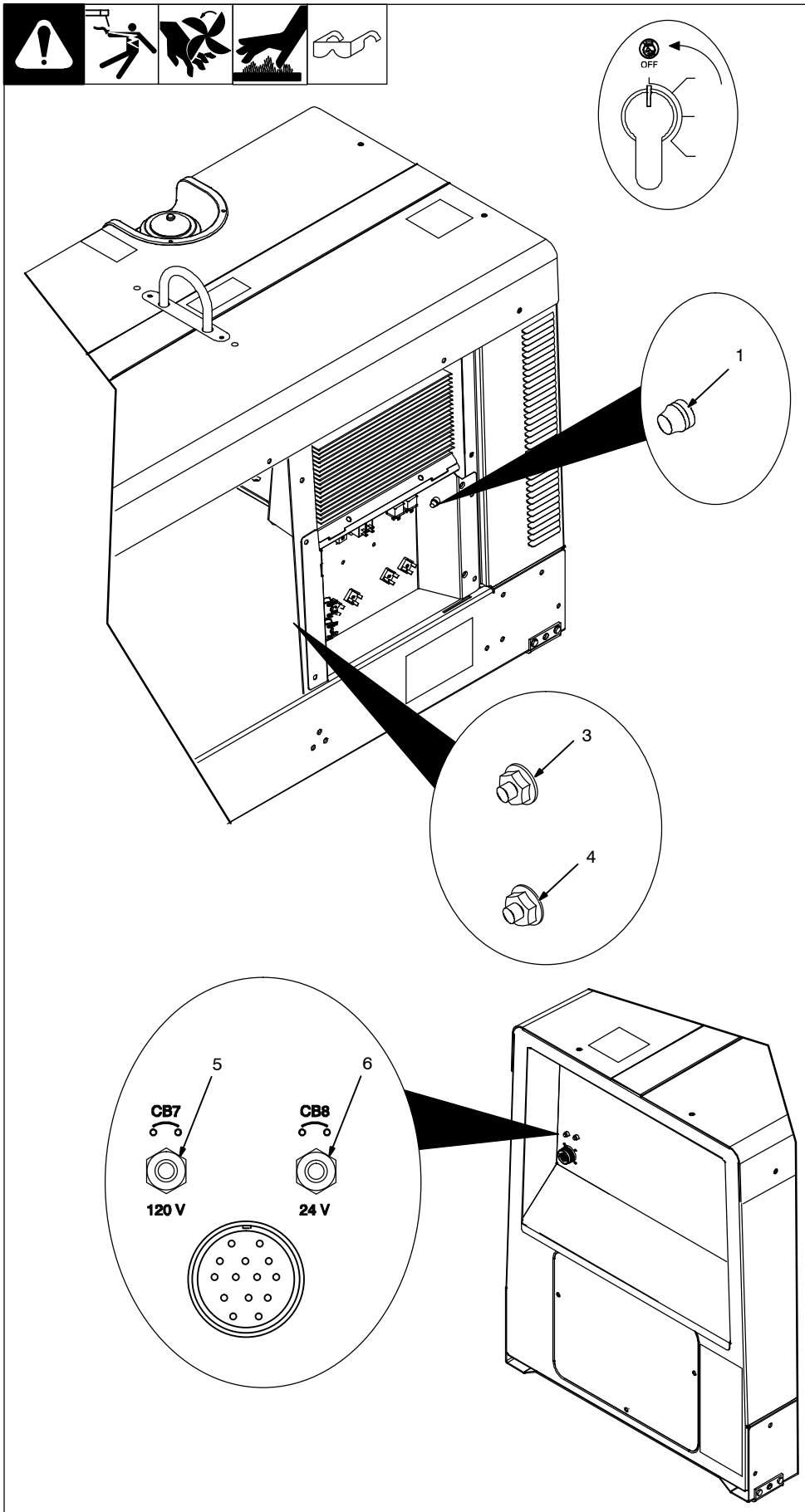

Stop engine.

When a circuit breaker, supplementary protector, or fuse opens, it usually indicates a more serious problem exists. Contact Factory Authorized Service Agent.

1 Fuse F1

F1 protects the stator exciter winding from overload. If F1 opens, weld and generator power is low or stops entirely.

2 Circuit Breaker CB1 (Not Shown)

3 Supplementary Protector CB2

4 Supplementary Protector CB3

5 Supplementary Protector CB7

6 Supplementary Protector CB8

CB1 protects the engine battery circuit. If CB1 opens, the engine will not crank. CB1 automatically resets when the fault is corrected.

CB2 protects the engine wiring harness. If CB2 opens, the engine will not crank.

CB3 protects part of the weld control wiring harness. If CB3 opens, weld and generator power output stops.

CB7 protects the 120 volt ac output to remote receptacle RC14. If CB7 opens, 120 volt output to RC14 stops.

CB8 protects the 24 volt ac output to remote receptacle RC14. If CB8 opens, 24 volt output to RC14 stops.

Press button to reset supplementary protector.

803 562 / 803 566

8-9. Adjusting Engine Speed

☞ *The engine is electronically governed. Engine speed adjustment must be done by an engine Factory Authorized Service Agent. Tampering with adjustments may affect engine warranty.*

8-10. Voltmeter/Ammeter Help Displays

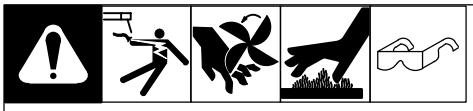

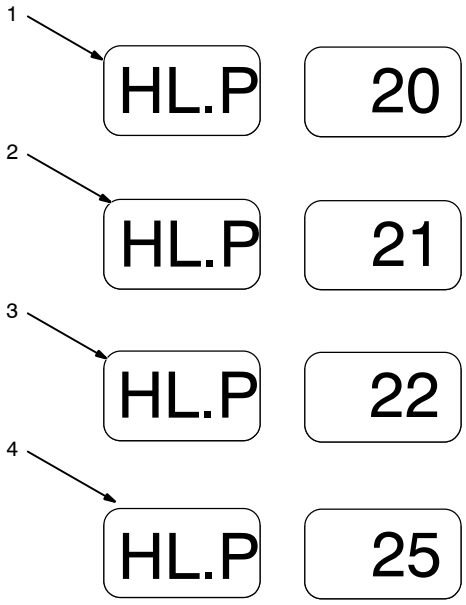

Use the Voltmeter/Ammeter help displays to diagnose and correct fault conditions.

☞ *When a help code is displayed normally weld output has stopped but generator power output may be okay.*

☞ *To reset help displays, stop unit and then restart. See item 4 below to reset Help 25 display.*

1 Help 20 Display

Indicates a failure of meter display module PC2, or the wiring between PC2 and main control module PC1, or PC1. If this display is shown, have Factory Authorized Service Agent check PC1, PC2, and the wiring between PC1 and PC2.

2 Help 21 Display

Thermistor TH1 in the IGBT module on the heat sink has failed. If this display is shown, have Factory Authorized Service Agent check TH1, and the wiring between TH1 and PC1.

3 Help 22 Display

Indicates the IBGT module heat sink has overheated. If this display is shown, check generator cooling system and/or reduce duty cycle. Keep engine access door closed when running to maintain proper cooling air flow past the heat sink. Allow unit to cool before restarting. If problem continues, have Factory Authorized Service Agent check unit.

4 Help 25 Display

Indicates a remote device connected to Remote Receptacle RC14 may be faulty. Help 25 is also displayed whenever a remote device has been connected to RC14 and then disconnected. Clear fault by stopping and restarting the unit or by turning Process/Contactor switch to another position. If problem continues, have Factory Authorized Service Agent check the remote device, filter board PC6, and main control module PC1.

8-11. Maintaining Stainless Steel (Models With Optional Package)

Stainless steel is very resistant to rust and corrosion; however, it must be kept clean to ensure rust and corrosion resistance. Units used in corrosive environments (chlorine or salt water environment for example) should be cleaned with mild soap and water frequently. If dirt build–up occurs, use a stainless steel cleaner to remove build–up. With proper maintenance, stainless steel maintains its luster and appearance.

8-12. Troubleshooting

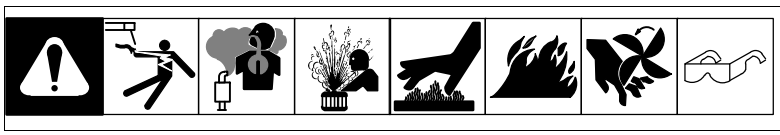

☞ *Also see Voltmeter/Ammeter help displays to assist in troubleshooting weld problems (see Section 8-10).*

A. Welding

Trouble	Remedy
No weld output; generator power output okay at AC receptacles.	Have Factory Authorized Service Agent check main rectifier and main control module PC1.
	Reset supplementary protector CB8 (see Section 8-8). Check for faulty remote device connected to RC14.
	Check and secure connections to Remote Control receptacle RC14 (see Section 5-12).
	Check Voltmeter/Ammeter help displays (see Section 8-10).
No weld output, or generator power output at AC receptacles.	Disconnect equipment from generator power receptacles during start-up.
	Reset supplementary protector CB3. (see Section 8-8).
	Check fuse F1, and replace if open (see Section 8-8). If F1 is open, have Factory Authorized Service Agent check the field excitation circuit.
	Check Voltmeter/Ammeter help displays (see Section 8-10).
	Have Factory Authorized Service Agent check brushes and slip rings and field excitation circuit.
Erratic weld output.	Check and tighten connections inside and outside unit.
	Be sure connection to work piece is clean and tight.
	Use dry, properly stored electrodes.
	Remove excessive coils from weld cables.
	Have Factory Authorized Service Agent check brushes and slip rings.
High weld output.	Have Factory Authorized Service Agent check main control module PC1 and hall device HD1.
Low weld output.	Check fuse F1, and replace if open (see Section 8-8). If F1 is open, have Factory Authorized Service Agent check the rotor.
Low open-circuit voltage.	Have Factory Authorized Service Agent check main control module PC1, field excitation circuit, and main rectifier.
No remote fine amperage control.	Repair or replace remote control device.
	Check and secure connections to Remote Amperage Adjust receptacle RC14 (see Section 5-12).
No 24 volt AC output at Remote receptacle RC14.	Reset supplementary protector CB8 (24 volt) (see Section 8-8).

B. Standard Generator Power

Trouble	Remedy
No generator power output at AC receptacles; weld output okay.	Reset receptacle supplementary protectors (see Section 7-1).Check and reset GFCI receptacles if necessary (see Section 7-1).
No generator power or weld output.	Disconnect equipment from generator power receptacles during start-up.
	Check fuse F1, and replace if open (see Section 8-8). Have Factory Authorized Service Agent check field excitation circuit.
	Reset supplementary protector CB3 (see Section 8-8).
	Check Voltmeter/Ammeter help displays (see Section 8-10).
	Have Factory Authorized Service Agent check brushes and slip rings, and field excitation circuit.
High output at generator power AC receptacles.	Have Factory Authorized Service Agent check field excitation circuit.
Low output at generator power AC receptacles.	Check fuse F1, and replace if open (see Section 8-8). If F1 is open, have Factory Authorized Service Agent check the rotor.

C. Engine

Trouble	Remedy
Engine will not crank.	Check battery, and replace if necessary.
	Check battery connections and tighten if necessary.
	Circuit breaker CB1 may be open. CB1 automatically resets when fault is corrected (see Section 8-8). Have Factory Authorized Service Agent check engine wiring harness and components.
	Reset supplementary protector CB2 (see Section 8-8).
	Check engine wiring harness plug connections.
	Have Factory Authorized Service Agent check Engine Control switch S1, Fuel/Hour gauge FUEL/HM, and control relay CR2.
Engine cranks but does not start.	Check fuel level.
	Check battery and replace if necessary. Check engine charging system according to engine manual.
	Have Factory Authorized Service Agent check control relay CR1, Fuel/Hour gauge FUEL/HM, fuel solenoid FS1, and the fuel pump.
	Air in fuel system. See engine manual.
Engine hard to start in cold weather.	Use Preheat switch S4 (see Section 6-2).
	Keep battery in good condition. Store battery in warm area off cold surface.
	Use fuel formulated for cold weather (diesel fuel can gel in cold weather). Contact local fuel supplier for fuel information.
	Use correct grade oil for cold weather (see Section 8-1).
	Have Factory Authorized Service Agent check Preheat switch S4, control relay CR3, and the glow plug.
Engine suddenly stops.	Check oil and coolant levels. Automatic shutdown system stops engine if oil pressure is too low or coolant temperature is too high (see Section 5-8).
	Check fuel/hour meter for indication of shutdown.
	Reset supplementary protector CB2 and/or clear fault causing circuit breaker CB1 to trip (see Section 8-8). Have Factory Authorized Service Agent check engine alternator, engine harness, fuel solenoid FS1, and the fuel pump.
	Have Factory Authorized Service Agent check Engine Control switch S1, control relay CR1, integrated rectifier SR2, fuel solenoid FS1, and the fuel pump.
	See engine manual.

Trouble	Remedy
Engine slowly stopped and cannot be restarted.	Check fuel level.
	Check fuel/hour meter for indication of shutdown.
	Check engine air and fuel filters (see Sections 8-3 and 8-7).
	See engine manual.
Battery discharges between uses.	Turn Engine Control switch off when unit is not running.
	Clean top of battery with baking soda and water solution; rinse with clear water.
	Recharge or replace battery if necessary.
	Periodically recharge battery (approximately every 3 months).
Engine idles, but does not come up to weld speed.	Have engine Factory Authorized Service Agent check engine speed control system.
Engine does not run at idle speed.	Have engine Factory Authorized Service Agent check engine speed control system.
Engine uses oil during run-in period; wetstacking occurs.	Dry engine according to run-in procedure (see Section 10).

Notes

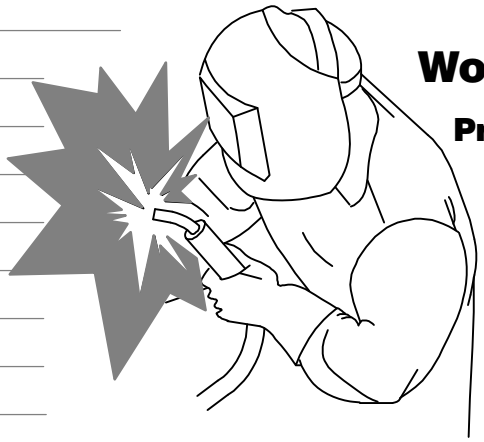

Work like a Pro!

Pros weld and cut safely. Read the safety rules at the beginning of this manual.

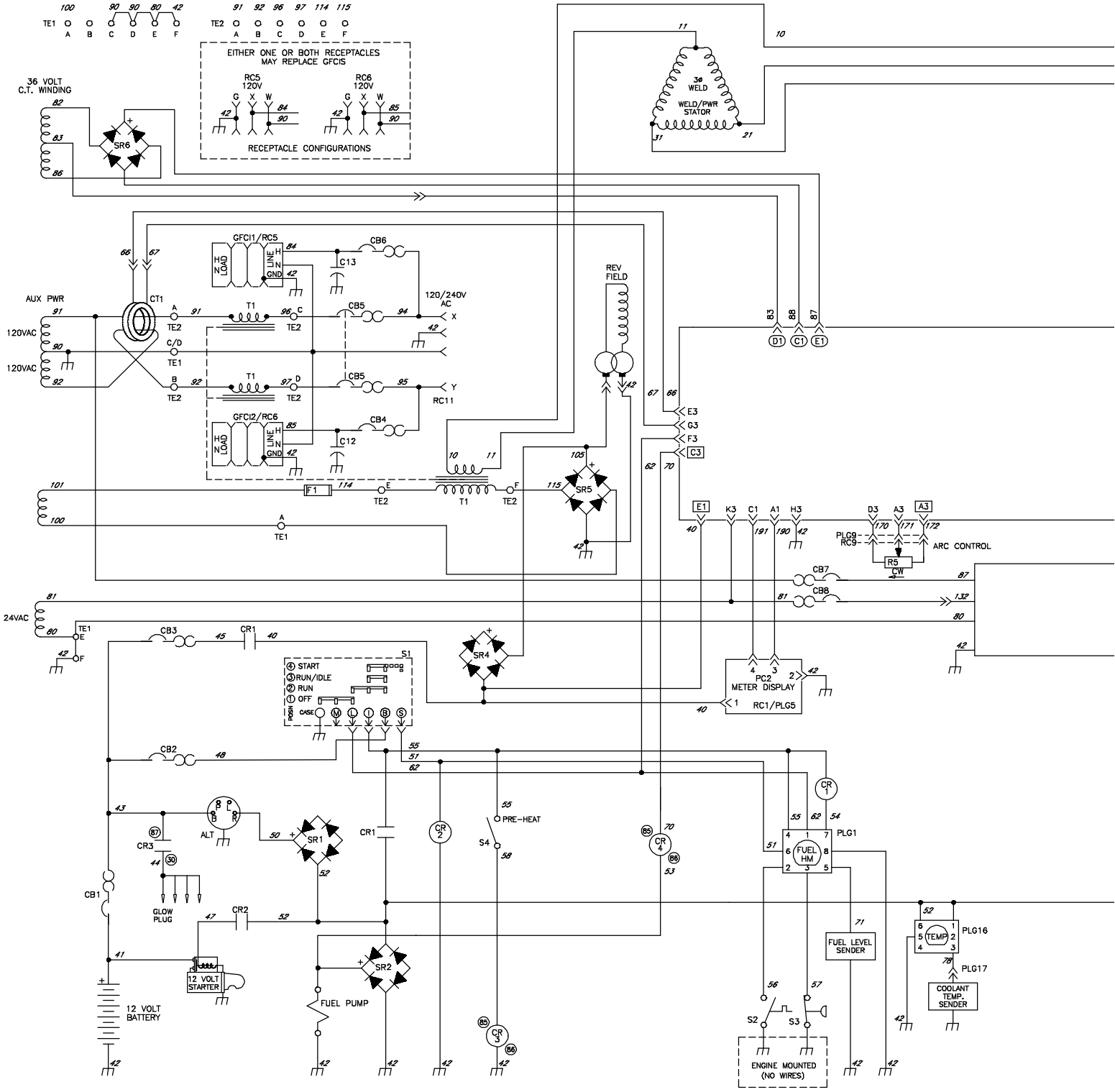

Figure 9-1. Circuit Diagram For Welding Generator

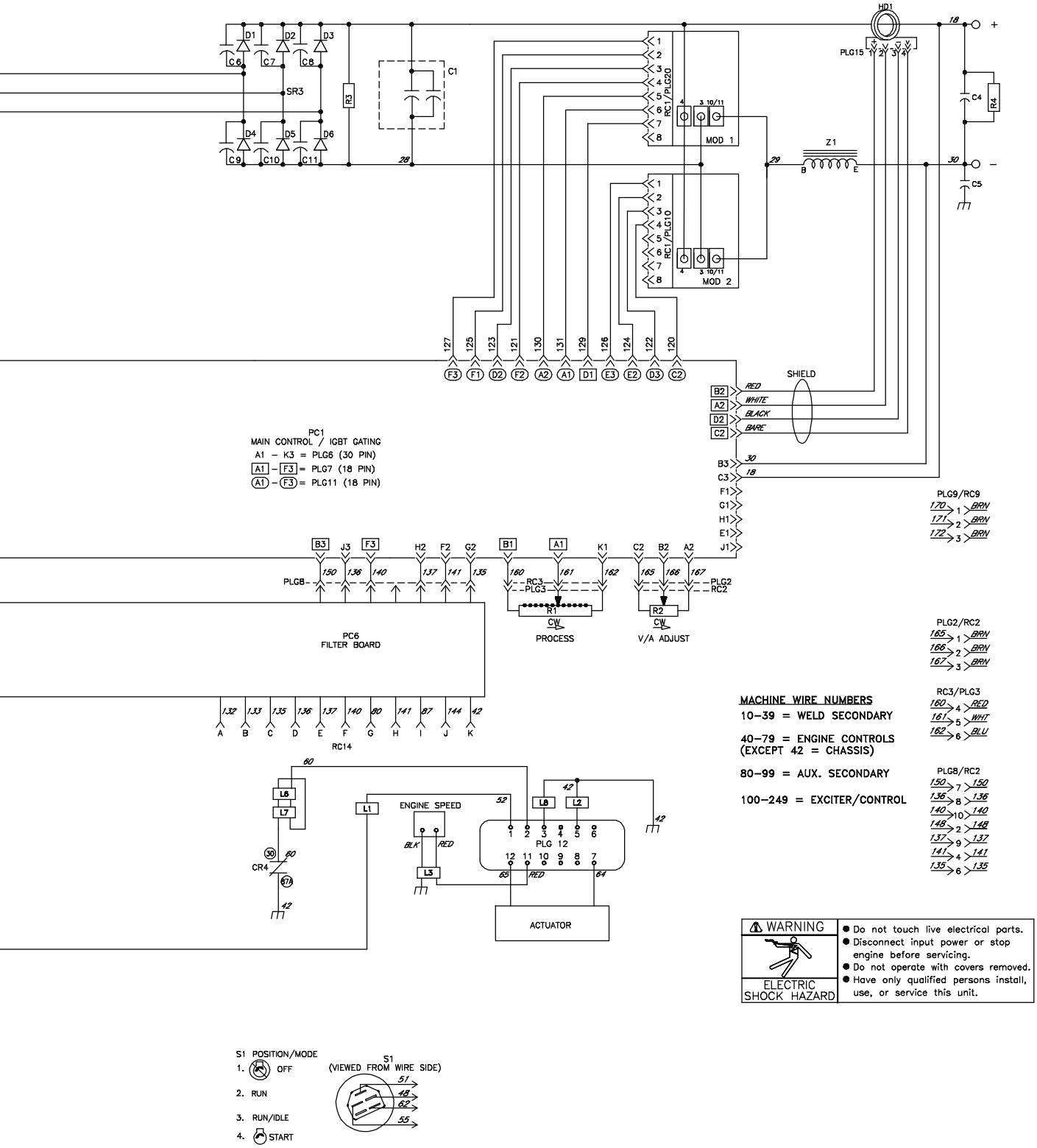
HD1
PLG15
D1
D2
D3
D4
D5
D6
C6
C7
C8
C9
C10
C11
SR3
R3
C1
RC1/PLG20
RC1/PLG10
MOD 1
MOD 2
Z1
C4
R4
C5
SHIELD
RED
WHITE
BLACK
BARE
PC1
MAIN CONTROL / IGBT GATING
A1 – K3 = PLG6 (30 PIN)
A1 – F3 = PLG7 (18 PIN)
A1 – F3 = PLG11 (18 PIN)
PLG9/RC9
PLG8
PLG2
RC2
RC3
PLG3
R1
R2
CW
PROCESS
V/A ADJUST
PC6
FILTER BOARD
RC14
MACHINE WIRE NUMBERS
10–39 = WELD SECONDARY
40–79 = ENGINE CONTROLS
(EXCEPT 42 = CHASSIS)
80–99 = AUX. SECONDARY
100–249 = EXCITER/CONTROL
PLG2/RC2
RC3/PLG3
PLG8/RC2
L6
L7
L1
L8
L2
L3
CR4
ENGINE SPEED
BLK
RED
PLG 12
ACTUATOR
WARNING
ELECTRIC SHOCK HAZARD
Do not touch live electrical parts.
Disconnect input power or stop engine before servicing.
Do not operate with covers removed.
Have only qualified persons install, use, or service this unit.
S1 POSITION/MODE
1. OFF
2. RUN
3. RUN/IDLE
4. START
S1
(VIEWED FROM WIRE SIDE)

246 894–D

10-1. Wetstacking

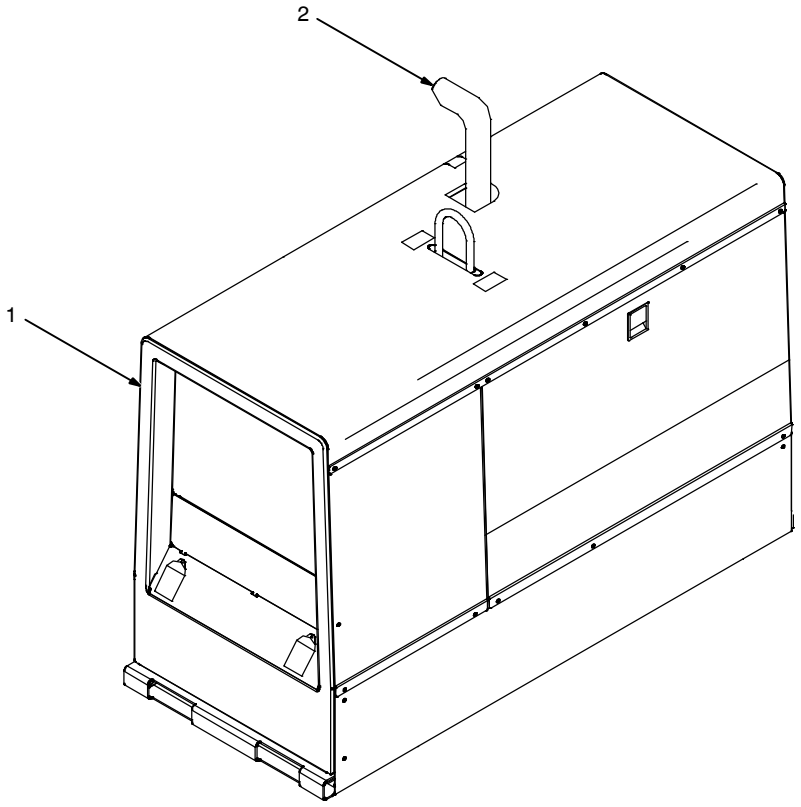

NOTICE *– Do not perform run-in procedure at less than 20 volts weld output and do not exceed duty cycle or equipment damage may occur.*

1 Welding Generator

Run diesel engines near rated voltage and current during run-in period to properly seat piston rings and prevent wetstacking. See nameplate, rating label, or specifications section in this manual to find rated voltage and current.

NOTICE *– Do not idle engine longer than necessary. Piston rings seat faster if engine runs at weld/power rpm, and the welding generator is kept loaded during run-in.*

2 Engine Exhaust Pipe

Wetstacking is unburned fuel and oil in the exhaust pipe and occurs during run-in if the engine is run too long at light load or idle rpm.

If exhaust pipe is coated with a wet, black, tar-like substance, dry the engine using one of the following run-in procedures.

See the engine manual for additional engine run-in information.

10-2. Run-In Procedure Using Load Bank

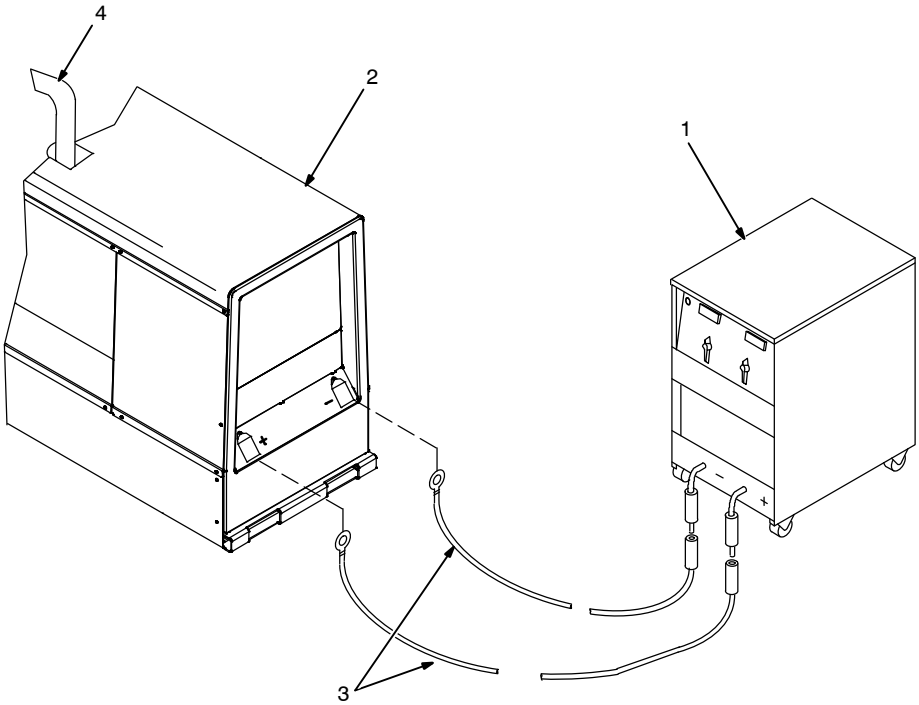

Stop engine.

Do not touch hot exhaust pipe, engine parts, or load bank/grid.

Keep exhaust and pipe away from flammables.

NOTICE *– Do not perform run-in procedure at less than 20 volts weld output and do not exceed duty cycle or equipment damage may occur.*

1 Load Bank

Turn all load bank switches Off. If needed, connect load bank to 115 volts ac wall receptacle or generator auxiliary power receptacle.

2 Welding Generator

Place A/V range switch in maximum position, A/V control in minimum position, and Output Selector switch (if present) in either DC position.

3 Weld Cables

Connect load bank to generator weld output terminals using proper size weld cables with correct connectors. Observe correct polarity.

Start engine and run for several minutes.

Set load bank switches and then adjust generator A/V control so load equals rated voltage and current of generator (see nameplate, rating label, or the specifications section in this manual).

Check generator and load bank meters after first five minutes then every fifteen minutes to be sure generator is loaded properly.

NOTICE *– Check oil level frequently during run-in; add oil if needed.*

It is recommended to run the welding generator for two hours minimum and up to four hours under load. Place A/V control in minimum position, then turn off load bank to remove load. Run engine several minutes at no load.

Stop engine and let cool.

4 Engine Exhaust Pipe

Repeat procedure if wetstacking is present.

S-0683

10-3. Run-In Procedure Using Resistance Grid

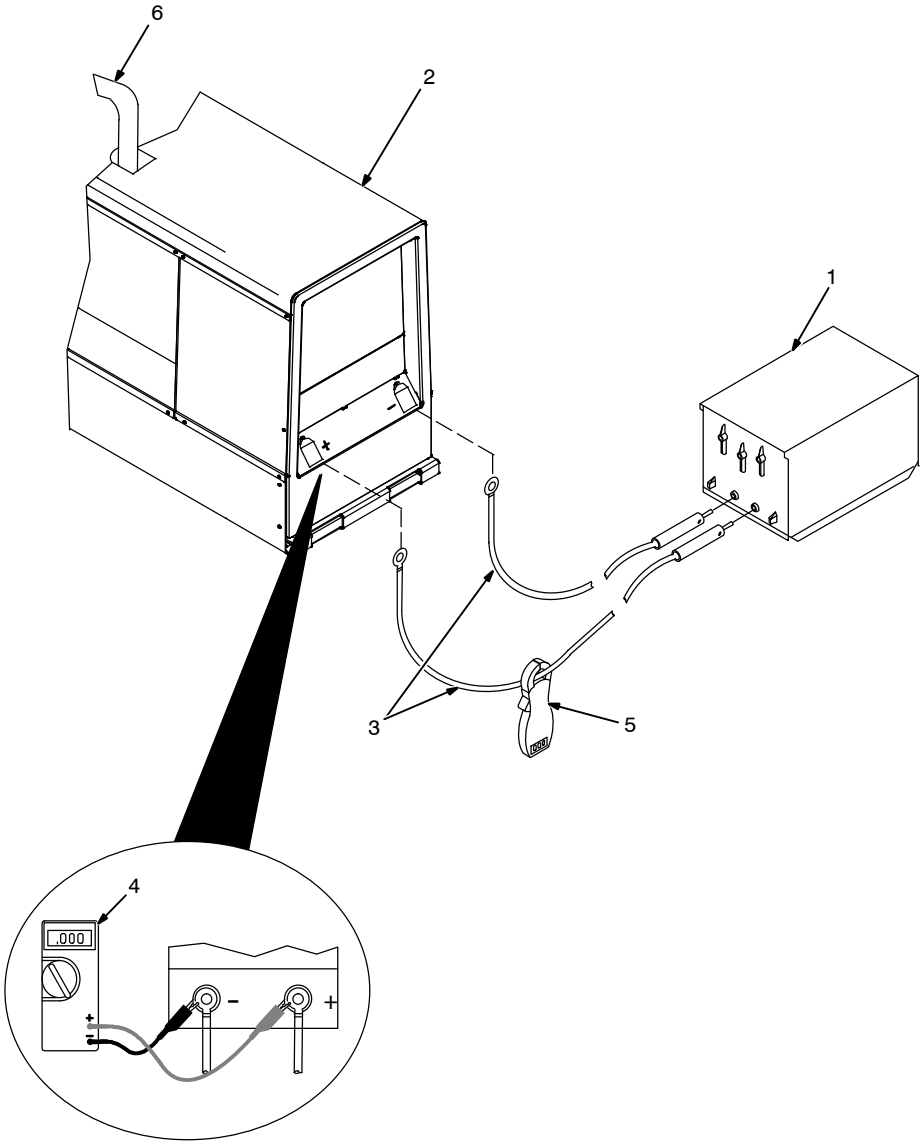

Stop engine.

Do not touch hot exhaust pipe, engine parts, or load bank/grid.

Keep exhaust and pipe away from flammables.

NOTICE *– Do not perform run-in procedure at less than 20 volts weld output and do not exceed duty cycle or equipment damage may occur.*

1 Resistance Grid

Use grid sized for generator rated output.

Turn Off grid.

2 Welding Generator

Place A/V range switch in maximum position, A/V control in minimum position, and Output Selector switch (if present) in either DC position.

3 Weld Cables

Connect grid to generator weld output terminals using proper size weld cables with correct connectors (polarity is not important).

4 Voltmeter

5 Clamp-On Ammeter

Connect voltmeter and ammeter as shown, if not provided on generator.

Start engine and run for several minutes.

Set grid switches and then adjust generator A/V control so load equals rated voltage and current of the generator (see nameplate, rating label, or the specifications section in this manual).

Check generator and meters after first five minutes then every fifteen minutes to be sure generator is loaded properly.

NOTICE *– Check oil level frequently during run-in; add oil if needed.*

It is recommended to run the welding generator for two hours minimum and up to four hours under load. Place A/V control in minimum position, then shut down grid to remove load. Run engine several minutes at no load.

Stop engine and let cool.

6 Engine Exhaust Pipe

Repeat procedure if wetstacking is present.

S-0684

SECTION 11 – GENERATOR POWER GUIDELINES

☞ *The views in this section are intended to be representative of all engine-driven welding generators. Your unit may differ from those shown.*

11-1. Selecting Equipment

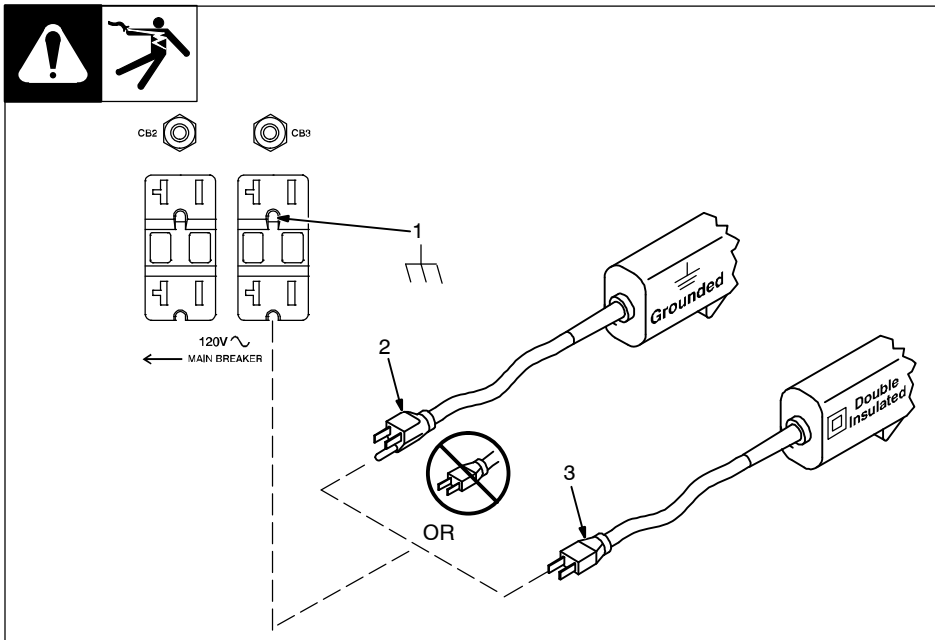

1 Generator Power Receptacles – Neutral Bonded To Frame

2 3-Prong Plug From Case Grounded Equipment

3 2-Prong Plug From Double Insulated Equipment

☞ *Be sure equipment has double insulated symbol and/or wording on it.*

Do not use 2-prong plug unless equipment is double insulated.

gen_pwr 2011–04 – ST-800 577

11-2. Grounding Generator To Truck Or Trailer Frame

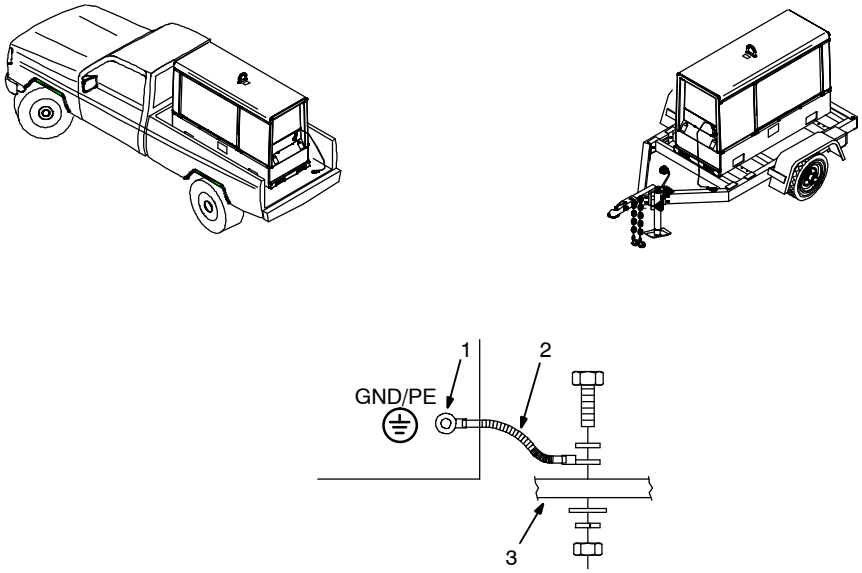

Always ground generator frame to vehicle frame to prevent electric shock and static electricity hazards.

Also see AWS Safety & Health Fact Sheet No. 29, Grounding of Portable And Vehicle Mounted Welding Generators.

1 Equipment Grounding Terminal (On Front Panel)

2 Grounding Cable (Not Supplied)

3 Metal Vehicle Frame

Connect cable from equipment ground terminal to metal vehicle frame. Use #8 AWG or larger insulated copper wire.

☞ *Electrically bond generator frame to vehicle frame by metal-to-metal contact.*

Bed liners, shipping skids, and some running gear insulate the welding generator from the vehicle frame. Always connect a ground wire from the generator equipment grounding terminal to bare metal on the vehicle frame as shown.

Use GFCI protection when operating auxiliary equipment. If unit does not have GFCI receptacles, use GFCI-protected extension cord.

800 652-D

11-3. Grounding When Supplying Building Systems

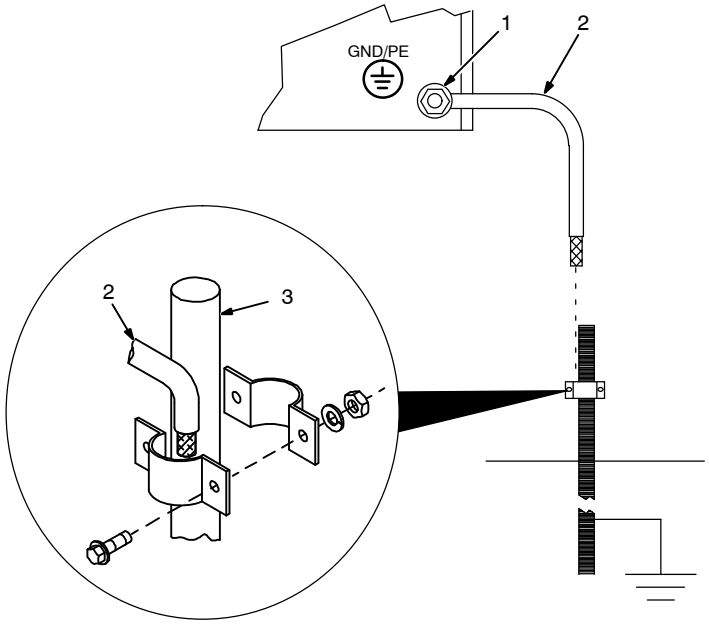

1 Equipment Grounding Terminal

2 Grounding Cable

Use #8 AWG or larger insulated copper wire.

3 Ground Device

☞ *Use ground device as stated in electrical codes.*

Ground generator to system earth ground if supplying power to a premises (home, shop, farm) wiring system.

Also see AWS Safety & Health Fact Sheet No. 29, Grounding of Portable And Vehicle Mounted Welding Generators.

ST-800 576-B

11-4. How Much Power Does Equipment Require?

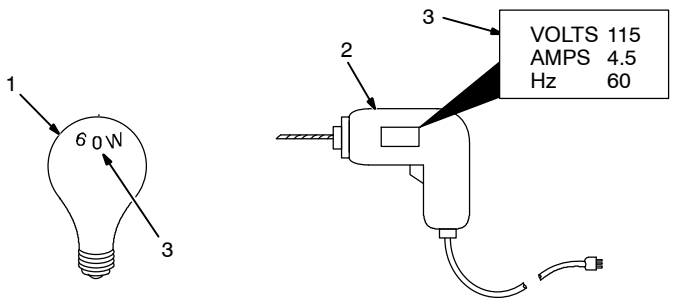

1 Resistive Load

A light bulb is a resistive load and requires a constant amount of power.

2 Non-Resistive Load

Equipment with a motor is a non-resistive load and requires approximately six times more power while starting the motor than when running (see Section 11-8).

3 Rating Data

Rating shows volts and amperes, or watts required to run equipment.

Amperes x Volts = Watts

Example 1: If a drill uses 4.5 amperes at 115 volts, calculate its running power requirement in watts.

4.5 A x 115 V = 520 W

The load applied by the drill is 520 watts.

Example 2: If three 200 watt flood lamps are used with the drill from Example 1, add the individual loads to calculate total load.

(3 x 200W) + 520 W = 1120 W

The total load applied by the three flood lamps and drill is 1120 watts.

S-0623

11-5. Approximate Power Requirements For Industrial Motors

Industrial Motors	Rating	Starting Watts	Running Watts
Split Phase	1/8 HP	800	300
	1/6 HP	1225	500
	1/4 HP	1600	600
	1/3 HP	2100	700
	1/2 HP	3175	875
Capacitor Start-Induction Run	1/3 HP	2020	720
	1/2 HP	3075	975
	3/4 HP	4500	1400
	1 HP	6100	1600
	1-1/2 HP	8200	2200
	2 HP	10550	2850
	3 HP	15900	3900
	5 HP	23300	6800
Capacitor Start-Capacitor Run	1-1/2 HP	8100	2000
	5 HP	23300	6000
	7-1/2 HP	35000	8000
	10 HP	46700	10700
Fan Duty	1/8 HP	1000	400
	1/6 HP	1400	550
	1/4 HP	1850	650
	1/3 HP	2400	800
	1/2 HP	3500	1100

11-6. Approximate Power Requirements For Farm/Home Equipment

Farm/Home Equipment	Rating	Starting Watts	Running Watts
Stock Tank De-Icer		1000	1000
Grain Cleaner	1/4 HP	1650	650
Portable Conveyor	1/2 HP	3400	1000
Grain Elevator	3/4 HP	4400	1400
Milk Cooler		2900	1100
Milker (Vacuum Pump)	2 HP	10500	2800
FARM DUTY MOTORS	1/3 HP	1720	720
Std. (e.g. Conveyors,	1/2 HP	2575	975
Feed Augers, Air	3/4 HP	4500	1400
Compressors)	1 HP	6100	1600
	1-1/2 HP	8200	2200
	2 HP	10550	2850
	3 HP	15900	3900
	5 HP	23300	6800
High Torque (e.g. Barn	1-1/2 HP	8100	2000
Cleaners, Silo Unloaders,	5 HP	23300	6000
Silo Hoists, Bunk Feeders)	7-1/2 HP	35000	8000
	10 HP	46700	10700
3-1/2 cu. ft. Mixer	1/2 HP	3300	1000
High Pressure 1.8 Gal/Min	500 PSI	3150	950
Washer 2 gal/min	550 PSI	4500	1400
2 gal/min	700 PSI	6100	1600
Refrigerator or Freezer		3100	800
Shallow Well Pump	1/3 HP	2150	750
	1/2 HP	3100	1000
Sump Pump	1/3 HP	2100	800
	1/2 HP	3200	1050

11-7. Approximate Power Requirements For Contractor Equipment

Contractor	Rating	Starting Watts	Running Watts
Hand Drill	1/4 in	350	350
	3/8 in	400	400
	1/2 in	600	600
Circular Saw	6-1/2 in	500	500
	7-1/4 in	900	900
	8-1/4 in	1400	1400
Table Saw	9 in	4500	1500
	10 in	6300	1800
Band Saw	14 in	2500	1100
Bench Grinder	6 in	1720	720
	8 in	3900	1400
	10 in	5200	1600
Air Compressor	1/2 HP	3000	1000
	1 HP	6000	1500
	1-1/2 HP	8200	2200
	2 HP	10500	2800
Electric Chain Saw	1-1/2 HP, 12 in	1100	1100
	2 HP, 14 in	1100	1100
Electric Trimmer	Standard 9 in	350	350
	Heavy Duty 12 in	500	500
Electric Cultivator	1/3 HP	2100	700
Elec. Hedge Trimmer	18 in	400	400
Flood Lights	HID	125	100
	Metal Halide	313	250
	Mercury	1000	
	Sodium	1400	
	Vapor	1250	1000
Submersible Pump	400 gph	600	200
Centrifugal Pump	900 gph	900	500
Floor Polisher	3/4 HP, 16 in	4500	1400
	1 HP, 20 in	6100	1600
High Pressure Washer	1/2 HP	3150	950
	3/4 HP	4500	1400
	1 HP	6100	1600
55 gal Drum Mixer	1/4 HP	1900	700
Wet & Dry Vac	1.7 HP	900	900
	2-1/2 HP	1300	1300

11-8. Power Required To Start Motor

Single-Phase Induction Motor Starting Requirements								
Motor Start Code	G	H	J	K	L	M	N	P
KVA/HP	6.3	7.1	8.0	9.0	10.0	11.2	12.5	14.0

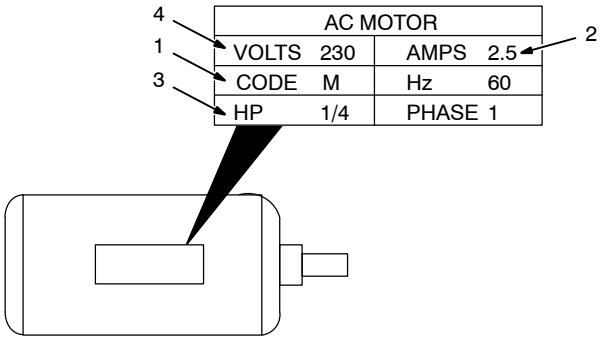

1 Motor Start Code

2 Running Amperage

3 Motor HP

4 Motor Voltage

To find starting amperage:

Step 1: Find code and use table to find kVA/HP. If code is not listed, multiply running amperage by six to find starting amperage.

Step 2: Find Motor HP and Volts.

Step 3: Determine starting amperage (see example).

Welding generator amperage output must be at least twice the motor's running amperage.

(kVA/HP x HP x 1000) / Volts = Starting Amperage

Example: Calculate starting amperage required for a 230 V, 1/4 HP motor with a motor start code of M.

Volts = 230, HP = 1/4, kVA/HP = 11.2

(11.2 x 1/4 x 1000) / 230 = 12.2A

Starting the motor requires 12.2 amperes.

S-0624

11-9. How Much Power Can Generator Supply?

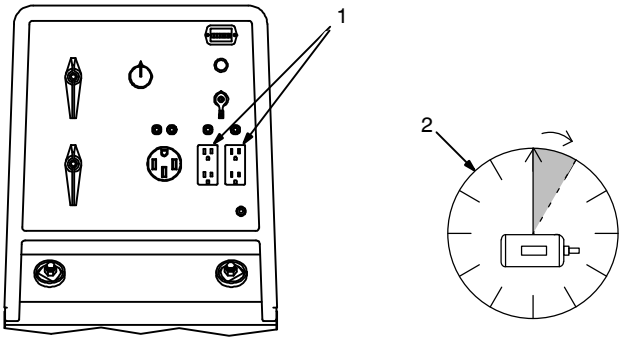

1 Limit Load To 90% Of Generator Output

Always start non-resistive (motor) loads in order from largest to smallest, and add resistive loads last.

2 5 Second Rule

If motor does not start within 5 seconds, turn off power to prevent motor damage. Motor requires more power than generator can supply.

Ref. ST-800 396-A / S-0625

11-10. Typical Connections To Supply Standby Power

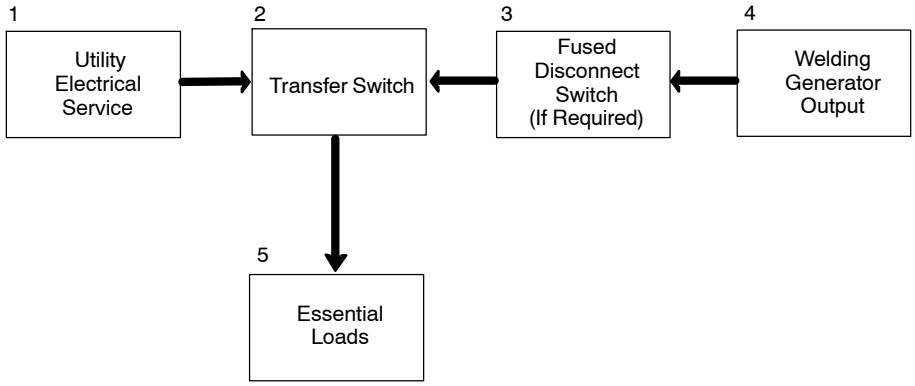

Have only qualified persons perform these connections according to all applicable codes and safety practices.

Properly install, ground, and operate this equipment according to its Owner's Manual and national, state, and local codes.

☞ *Customer-supplied equipment is required if generator will supply standby power during emergencies or power outages.*

1 Utility Electrical Service

2 Transfer Switch (Double-Throw)

Switch transfers the electrical load from electric utility service to the generator. Transfer load back to electric utility when service is restored.

Install correct switch (customer-supplied). Switch rating must be same as or greater than the branch overcurrent protection.

3 Fused Disconnect Switch

Install correct switch (customer-supplied) if required by electrical code.

4 Welding Generator Output

Generator output voltage and wiring must be consistent with regular (utility) system voltage and wiring.

Connect generator with temporary or permanent wiring suitable for the installation.

Turn off or unplug all equipment connected to generator before starting or stopping engine. When starting or stopping, the engine has low speed which causes low voltage and frequency.

5 Essential Loads

Generator output may not meet the electrical requirements of the premises. If generator does not produce enough output to meet all requirements, connect only essential loads (pumps, freezers, heaters, etc. – See Section 11-4).

11-11. Selecting Extension Cord (Use Shortest Cord Possible)

Cord Lengths for 120 Volt Loads

Use GFCI protection when operating auxiliary equipment. If unit does not have GFCI receptacles, use GFCI-protected extension cord.

Current (Amperes)	Load (Watts)	Maximum Allowable Cord Length in ft (m) for Conductor Size (AWG)*					
		4	6	8	10	12	14
5	600			350 (106)	225 (68)	137 (42)	100 (30)
7	840		400 (122)	250 (76)	150 (46)	100 (30)	62 (19)
10	1200	400 (122)	275 (84)	175 (53)	112 (34)	62 (19)	50 (15)
15	1800	300 (91)	175 (53)	112 (34)	75 (23)	37 (11)	30 (9)
20	2400	225 (68)	137 (42)	87 (26)	50 (15)	30 (9)	
25	3000	175 (53)	112 (34)	62 (19)	37 (11)		
30	3600	150 (46)	87 (26)	50 (15)	37 (11)		
35	4200	125 (38)	75 (23)	50 (15)			
40	4800	112 (34)	62 (19)	37 (11)			
45	5400	100 (30)	62 (19)				
50	6000	87 (26)	50 (15)				

*Conductor size is based on maximum 2% voltage drop

Cord Lengths for 240 Volt Loads

Use GFCI protection when operating auxiliary equipment. If unit does not have GFCI receptacles, use GFCI-protected extension cord.

Current (Amperes)	Load (Watts)	Maximum Allowable Cord Length in ft (m) for Conductor Size (AWG)*					
		4	6	8	10	12	14
5	1200			700 (213)	450 (137)	225 (84)	200 (61)
7	1680		800 (244)	500 (152)	300 (91)	200 (61)	125 (38)
10	2400	800 (244)	550 (168)	350 (107)	225 (69)	125 (38)	100 (31)
15	3600	600 (183)	350 (107)	225 (69)	150 (46)	75 (23)	60 (18)
20	4800	450 (137)	275 (84)	175 (53)	100 (31)	60 (18)	
25	6000	350 (107)	225 (69)	125 (38)	75 (23)		
30	7000	300 (91)	175 (53)	100 (31)	75 (23)		
35	8400	250 (76)	150 (46)	100 (31)			
40	9600	225 (69)	125 (38)	75 (23)			
45	10,800	200 (61)	125 (38)				
50	12,000	175 (53)	100 (31)				

*Conductor size is based on maximum 2% voltage drop

☞ *Hardware is common and not available unless listed.*

Wiring harnesses are listed at the end of parts section.

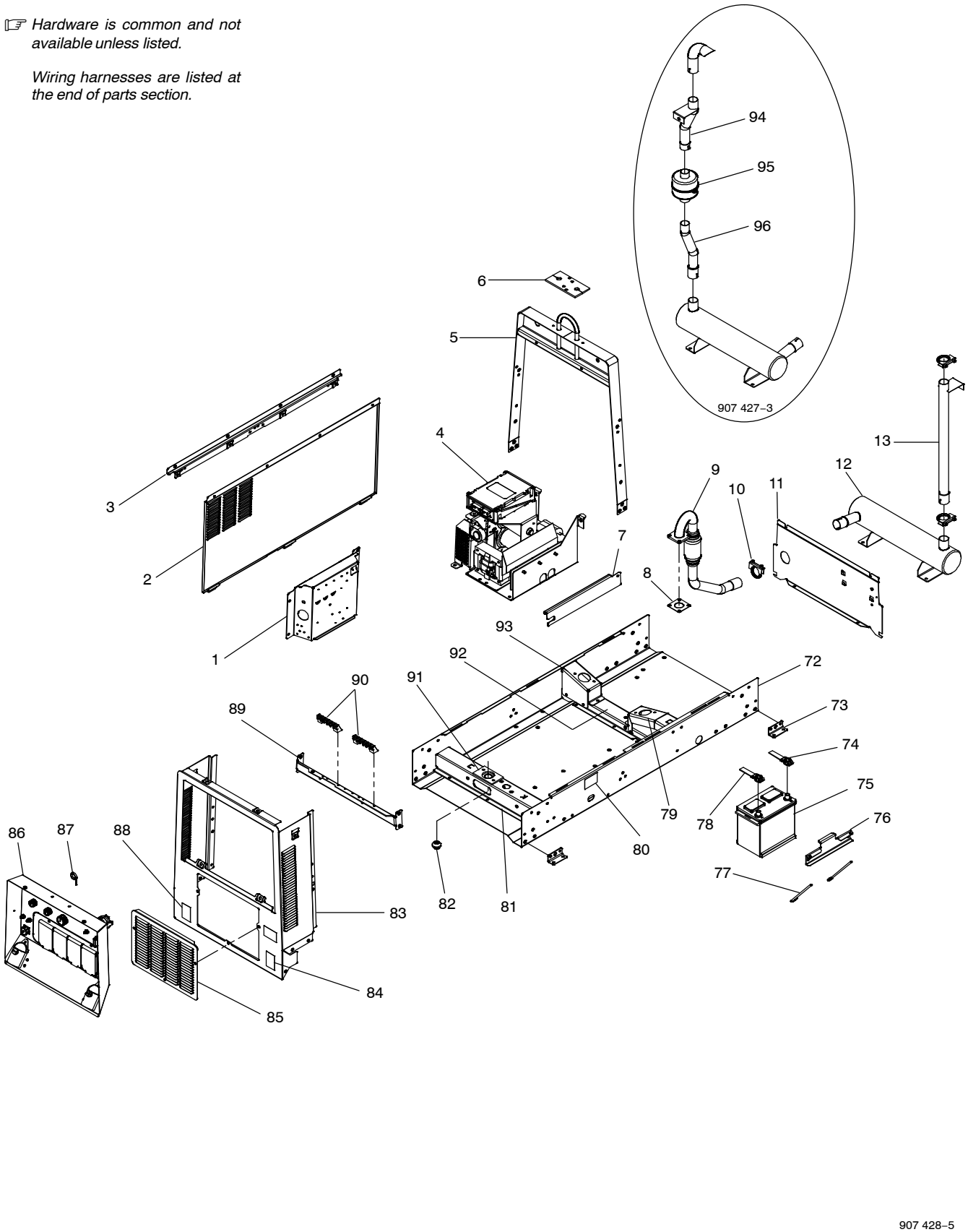

Figure 12-1. Main Assembly

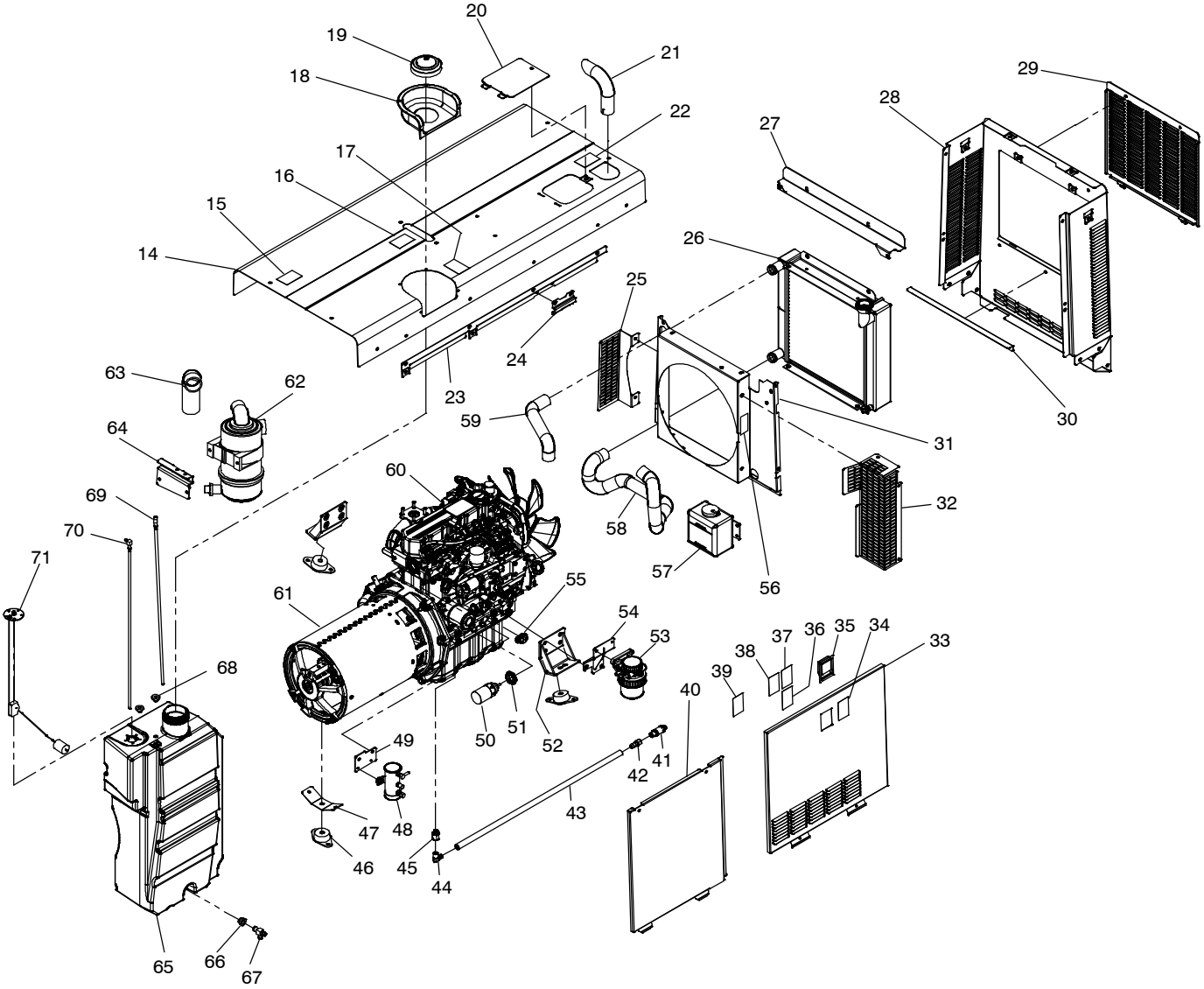
20
19
21
18
22
29
28
27
17
16
15
14
26
25
24
23
63
62
59
30
64
31
60
69
32
58
70
57
56
71
55
61
54
53
37
36
35
34
33
38
39
68
40
49
50
51
52
41
42
43
47
48
46
45
44
65
66
67

907 428–4

Item No.	Dia. Mkgs.	Part No.	Description	Quantity

Figure 12-1. Main Assembly

1		Figure 12-2	Control Panel	1
2		+243709	Panel, Engine Side	1
2		♦+249221	Panel, Engine Side SS	1
3		213471	Bracket, Cover Top (LH)	1
3		♦213633	Bracket, Cover Top (LH) SS	1
4		Figure 12-5	Weld Control Assembly	1
5		213493	Upright, Center Assy	1
6		189464	Seal, Weather Lift Eye	1
7		214753	Bracket, Holddown Fuel Tank	1
8		245752	Gasket, Exhaust Outlet	1
9		241264	Pipe, Exhaust Flexible Inlet	1
10		209057	Clamp, Muffler 1.625 Dia U Pld	3
11		212604	Baffle, Air Lower Radiator	1
12		201528	Muffler, Exhaust Engine	1
13		212605	Pipe, Exhaust	1
14		+249358	Cover, Top W/Protective Coating	1
15		233088	Label, Danger Using A Generator Indoors Can Kill You In Minutes	1
16		222513	Label, Warning Falling Equipment Can Cause Serious	1
17		192041	Label, Use Diesel Fuel Only	1
18		189052	Grommet, Plastic Neck Filler Fuel	1
19		190198	Cap, Tank Screw−on 3.500 In W/Vent W/Lanyard 8”	1
20		249714	Cover, Radiator Access W/Protective Coating	1
21		214604	Pipe, Exhaust Elbow	1
22		224265	Label, Warning Hot Exhaust Parts Do Not Touch	1
23		248725	Bracket, Cover Top (RH)	1
23		♦249201	Bracket Cover Top (RH) SS	1
24		213472	Keeper, Latch Engine Access	1
25		241266	Guard, Fan	1
26		243698	Radiator, W/14# Cap 1 Row Core 1.250 Inlet/Outlet	1
		187120	Cap, Radiator Pressure 14 Lb	1
27		212603	Baffle, Air Upper Radiator	1
28		+243710	Upright, Rear	1
29		243711	Panel, Rear Access	1
30		220295	Bracket, Stiffener	1
31		+241176	Shroud, Radiator	1
32		213503	Guard, Fan	1
		222652	Bracket, Mtg Hose	1
33		+248726	Door, Engine Access	1
33		♦+249122	Door, Engine Access SS	1
34		225120	Label, Warning Moving Parts Can Cause Injury	4
35		245362	Latch, Paddle Series 20 (Black)	1
35		♦190126	Latch, Paddle Series 20 (SS)	1
36		203260	Label, Caution Do Not Use Ether	1
37		239396	Label, Diesel Engine Maintenance Mitsubishi S4L2	1
38		168385	Label, Warning Battery Explosion Can Blind	1
39		217698	Label, Help Codes	1
		191626	Bumper, Door Engine Access	3
40		248727	Panel, Door Side	1
40		♦249123	Panel, Door Side SS	1
		199505	Hose Assy, Oil Drain 32.000 Lg (Includes)	1
41		165271	Valve, Oil Drain 3/8−18 Nptf	1
42		176529	Ftg, Hose Brs Barbed Fem 1/2 Tbg X 3/8 Npt	1
43		113854	Hose, Sae .500 Id X .780 Od Xcoil	2.6 Ft.
44		197448	Ftg, Hose Brs Barbed Elbow M 1/2 Tbg X 3/8 Npt	1
45		236978	Ftg, Adapter Oil Drain Mitsubishi	1

Item No.	Dia. Mkgs.	Part No.	Description	Quantity
			Figure 12-1. Main Assembly (Continued)	
46		213266	Mount, Engine/Generator Flange Mtg	3
47		213461	Bracket, Mtg Generator	1
48		241265	Pump, Fuel	1
49		241255	Bracket, Mtg Fuel Pump	1
50		242538	Actuator, Linear	1
51		243763	Nut, M30x1.5 Hex	1
52		244218	Bracket, Mtg Engine	2
53		252781	Filter, Fuel Spin−on	1
54		243950	Bracket, Mtg Fuel Filter	1
55		300664	Heater, Block Engine 115v 400w	1
56		225120	Label, Warning Moving Parts Can Cause Injury	4
57		190190	Tank, Coolant Recovery	1
58		241286	Hose, Radiator Lower	1
59		241256	Hose, Radiator Upper	1
60		242642	Engine, Mitsubishi Dsl Elec S4L2	1
		*213858	Filter, Fuel In−line 5/16x5/16 Mic 125 −175	1
		*242882	Filter, Lube Oil	1
		244039	Switch, Coolant Temp N.C. 111c	1
		244040	Switch, Lubricating Oil Pressure N.c.	1
		249852	Sender, Coolant Temp	1
		242883	Belt, Alternator	1
		244711	Filter Kit, Mitsubishi (S4L2)	0
61		Figure 12-4	Generator Assembly	1
62		249657	Air Cleaner, Intake 5.250 In (Includes)	1
		197829	Bracket, Mtg Air Cleaner	1
		249661	Dust Ejector, Air Cleaner	1
		*197676	Element, Air Cleaner	1
		*197679	Element, Air Cleaner Safety	1
		249659	Cover Assy, Air Cleaner	1
		249658	Body, Air Cleaner	1
		249661	Latch, Air Cleaner	1
63		241272	Hose, Air Intake	1
64		249550	Bracket, Mtg Air Intake	1
65		227643	Tank, Fuel (Includes Fuel Cap And Items Below)	1
66		181572	Bushing, Tank Fuel	1
67		189908	Valve, Drain Fuel 180 Deg Zinc Pld	1
68		124253	Bushing, Tank Fuel	1
69		212611	Hose, Fuel Stand Pipe W/3/16 In Ftg (Return)	1
70		212610	Hose, Fuel Stand Pipe W/5/16 In Ftg (Supply)	1
71	SENDER	235191	Sender, Fuel Gauge	1
72		213458	Base	1
73		213668	Bracket, Mtg Unit	4
74		190207	Cable, Bat Pos 45 In Lg No 1 Awg W/Clamp & .406 Rng	1
75	BATT	146237	Battery, Stor 12v 585 Crk 95 Rsv Gp 55 Maint Free	1
76		213466	Bracket, Battery Holddown	1
77		213465	Bolt, J Stl .312−18 X 7.250 Pld	2
78		190206	Cable, Bat Neg 42 In Lg 2 Awg W/Clamp & .375 Rng	1
79		213483	Support, Engine Rh	1
80		224266	Label, Warning Do Not Weld On Base	2
81		213460	Crossmember, Generator	1
82		213463	Spacer/Snubber, Generator Mtg	1
83		+226104	Upright, Front	1
84		233953	Label, Warning General Precautionary (CSA)	1
85		220955	Panel, Front Access	1
86		Figure 12-3	Front Panel Assembly	1
87	CT1	105370	Xfmr, Current	1

Item No.	Dia. Mkgs.	Part No.	Description	Quantity
			Figure 12-1. Main Assembly (Continued)	
88			Label, Rating Card 907428 (Order By Model And Serial No.)	1
89		213500	Brkt, Beam Support	1
90	TE1, TE2	172661	Block, Stud Connection 6 Position	2
		173734	Link, Jumper	3
91		213462	Pad, Mtg Generator	1
92		213459	Crossmember, Engine	1
		213464	Bracket, Battery Locator (In Base – Not Shown)	1
93		213485	Support, Engine Lh	1
94		♦244508	Pipe, Exhaust Spark Arresstor	1
95		♦088528	Spark Arrestor, Exhaust	1
96		♦244507	Pipe, Exhaust	1
		238650	Label, Hour/Fuel Meter Usage	1
		213506	Bracket, Hold–Down Fuel Tank (Not Shown)	1
			Kit, Label (Includes Safety And Informational Labels)	1

\+ When ordering a component originally displaying a precautionary label, the label should also be ordered.

* Recommended Spare Parts.

♦Optional

To maintain the factory original performance of your equipment, use only Manufacturer's Suggested Replacement Parts. Model and serial number required when ordering parts from your local distributor.

☞ *Hardware is common and not available unless listed.*

Wirng harnesses are listed at the end of parts section.

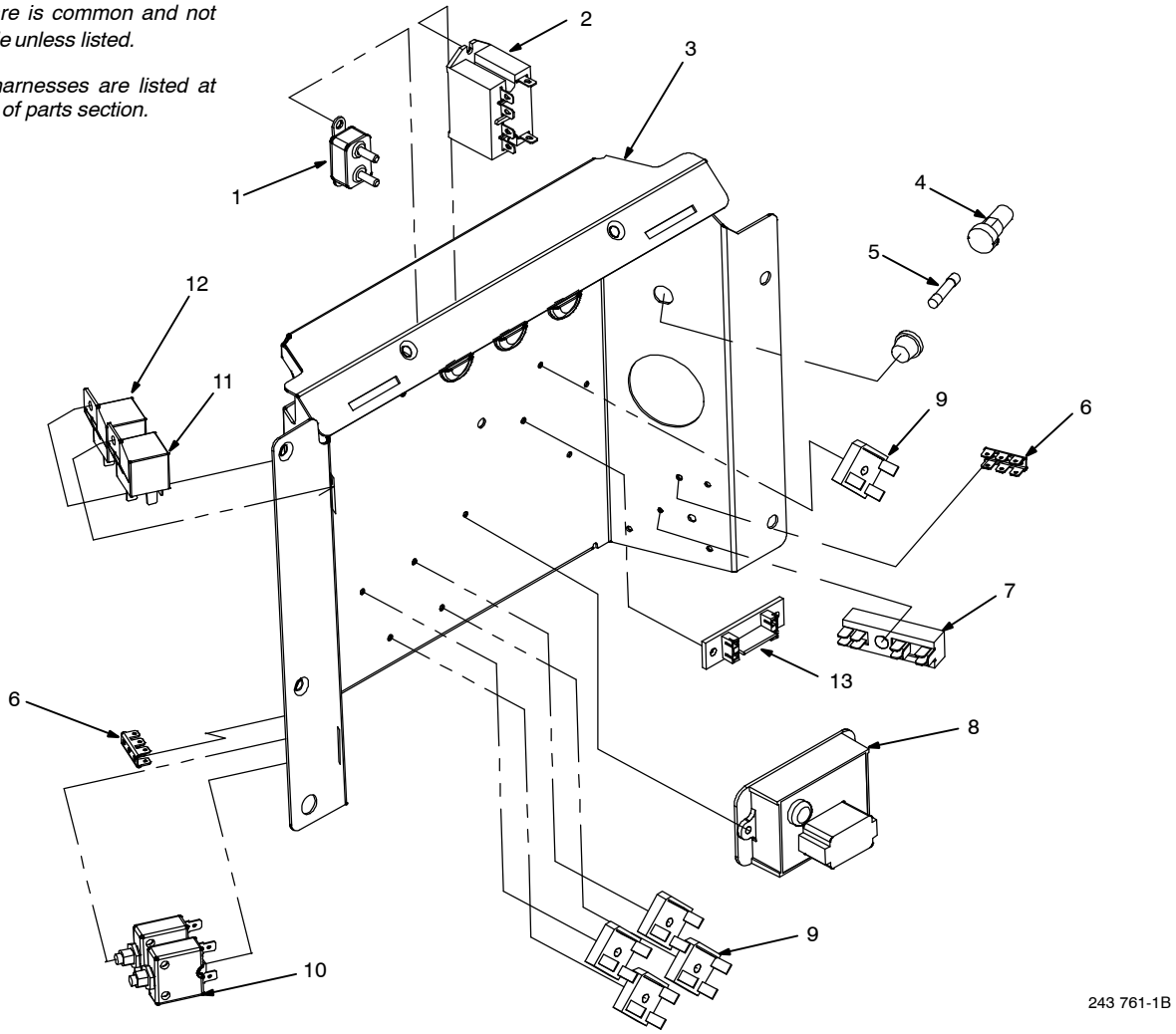

Figure 12-2. Control Panel

Item No.	Dia. Mkgs.	Part No.	Description	Quantity
			Figure 12-2. Control Panel (Figure 12-1 Item 1)	
1	CB1	190374	Circuit Breaker, Auto Reset 12vdc 40 Amp	1
2	CR1	223710	Relay, Encl 12vdc Dpst−no 25a 6pin Flange	1
3		285300	Bracket, Mtg Components	1
4		046432	Holder, Fuse Mintr .250 X 1.250 Panel Mtg	1
5	F1	085874	Fuse, Mintr Cer Slo−blo 10. Amp 250 Volt	1
6		129524	Term, Frict 250x032 Uninsul Male .130 Stud Mtg 3pr	2
7	TE3	190210	Block, Term 5−3−3	1
8		242295	Module, Control Governor (Programed)	1
9	SR1,2,4,5,6	035704	Rectifier, Integ Bridge 40. Amp 800v	5
10	CB2, CB3	083432	Supplementary Pro, Man Reset 1p 10a 250vac Frict	2
		190323	Boot, Circuit Breaker Clear Hex Nut	2
11	CR4	173069	Relay, Encl 12vdc Spdt 30a/20a 5pin Flange Mtg	1
12	CR3	197325	Relay, Encl 12vdc Spst 70a 4pin Flange Mtg	1
13	R4, C4	249589	Resistor/Capacitor Board,	1
	CR2	214876	Relay, Encl 6vdc Spst 35a/14vdc 5 Pin (in Wiring Harness)	1

To maintain the factory original performance of your equipment, use only Manufacturer's Suggested Replacement Parts. Model and serial number required when ordering parts from your local distributor.

Hardware is common and not available unless listed.

Wiring harnesses are listed at the end of parts section.

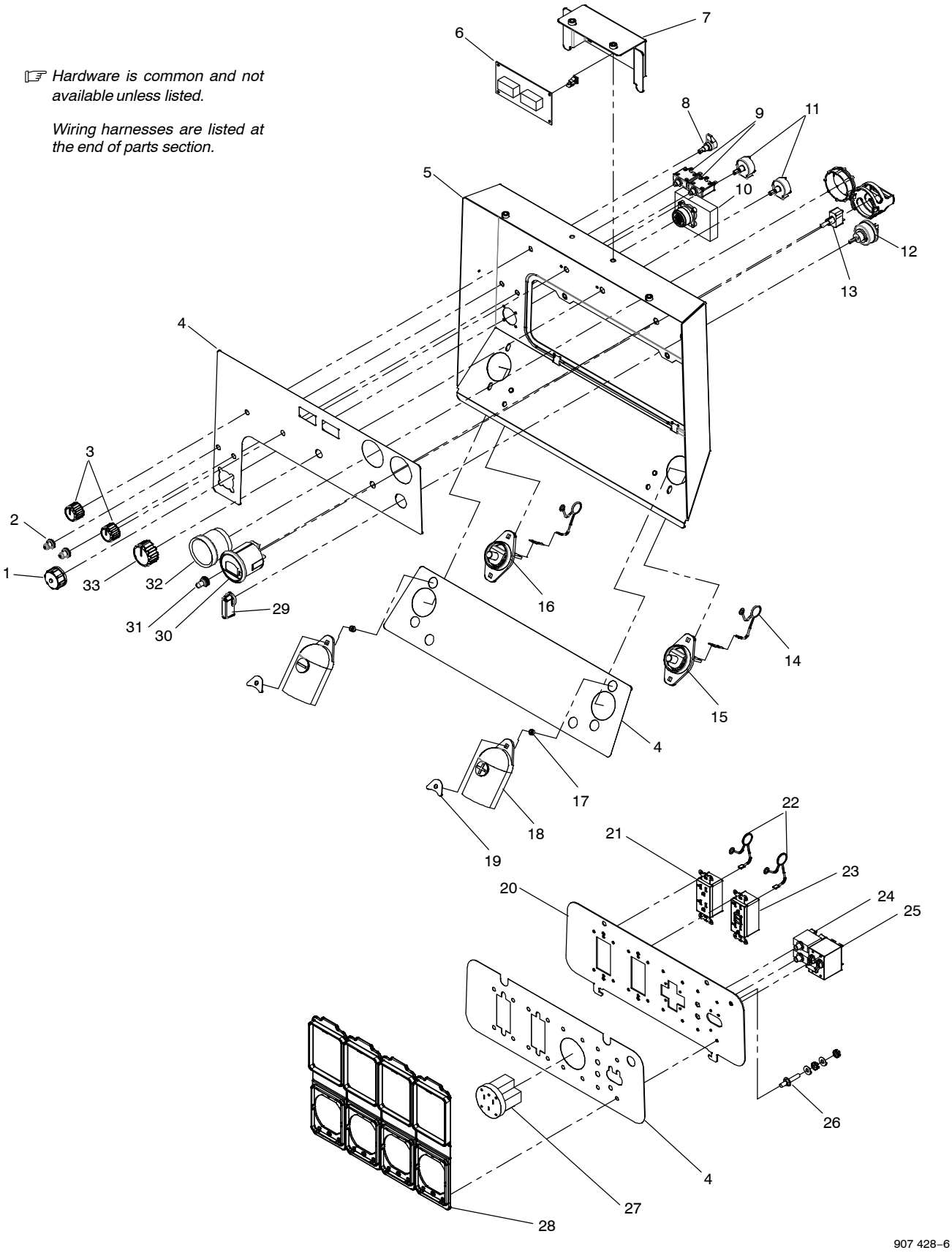

Figure 12-3. Panel, Front w/Components

Item No.	Dia. Mkgs.	Part No.	Description	Quantity

Figure 12-3. Panel, Front w/Components (Figure 12-1 Item 86)

1		170391	Conn, Circ Ms Protective Cap Size 20 Nylon	1
2		190323	Boot, Circuit Breaker Clear Hex Nut	2
3		207080	Knob, Pointer 1.125 Dia	2
4			Nameplate (Order By Model & Serial No.)	1
5		247644	Panel, Front Engine/Weld Control	1
6	PC2	247416	Circuit Card Assy, Display W/Program	1
7		214543	Enclosure, Circuit Card Assy	1
		134201	Stand−off Support, Pc Card .312/.375w/Post&lock .43	4
8	R1	246961	Switch, Rotary 3 Posn 1p 200ma 28vdc W/Resistors	1
9	CB7, CB8	083432	Supplementary Pro, Man Reset 1p 10a 250vac Frict	2
10	PC6	229949	Circuit Card Assy, Connector/Receptacle	1
11	R2, R5	193118	Pot, Cp Flat 1t 2. W 1k Ohm Linear	2
12	S1	217680	Switch, Ignition 4 Position W/Out Handle	1
13	S4	021467	Switch, Tgl Spst 3a 250v Off−none−(On) Spd Term	1
14	C4, C5	128750	Capacitor, Cer Disc .1 Uf 500 Vdc W/Terms	2
15		241432	Terminal, Pwr Output Red	1
16		241433	Terminal, Pwr Output Black	1
17		181169	Spacer, Output Stud	2
18		186621	Boot, Generic Output Stud	2
19		180735	Washer, Output Stud	2
		010381	Connector, Rectifier	2
20		213509	Panel, Power	1
21	RC5	214918	Rcpt, Str Dx Grd 2p3w 20a 125v *5−20r	1
22	C12, C13	217054	Capacitor, Cer Disc .0047 Uf 3000 Vdc W/Terms	2
23	GFCI2	246865	Rcpt, Str Dx Grd 2p3w 20a 125v *5−20r Gfi	1
24	CB4, CB6	093996	Supplementary Pro, Man Reset 1p 20a 250vac Frict	2
25	CB5	203026	Supplementary Protector, Man Reset 2p 50a 240vac	1
26	GRD	083030	Stud, Brs .250−20 X 1.750 W/Hex Collar	1
		010915	Washer, Flat .257idx0.640odx.031t Brs	4
		601836	Nut, 250−20 .50hex .19h Brs	3
27	RC11	182954	Rcpt, Str 3p4w 50a 125/250v Flush Mtg *14−50	1
28		209056	Cover, Receptacle W/Gasket	4
29		207073	Lever, Ignition Switch	1
		201244	Washer, Tooth.728idx1.166odx.050t Stl Pld Int.688	1
30	FUEL/HM	246181	Gauge, Fuel Elec/Hour Meter	1
31		021385	Boot, Toggle Switch Lever	1
32	TEMP	217084	Gauge, Coolant Temp 0− 300 Deg F	1
33		218764	Knob, Pointer 1.625 Dia	1

To maintain the factory original performance of your equipment, use only Manufacturer's Suggested Replacement Parts. Model and serial number required when ordering parts from your local distributor.

☞ *Hardware is common and not available unless listed.*

Wiring harnesses are listed at the end of parts section.

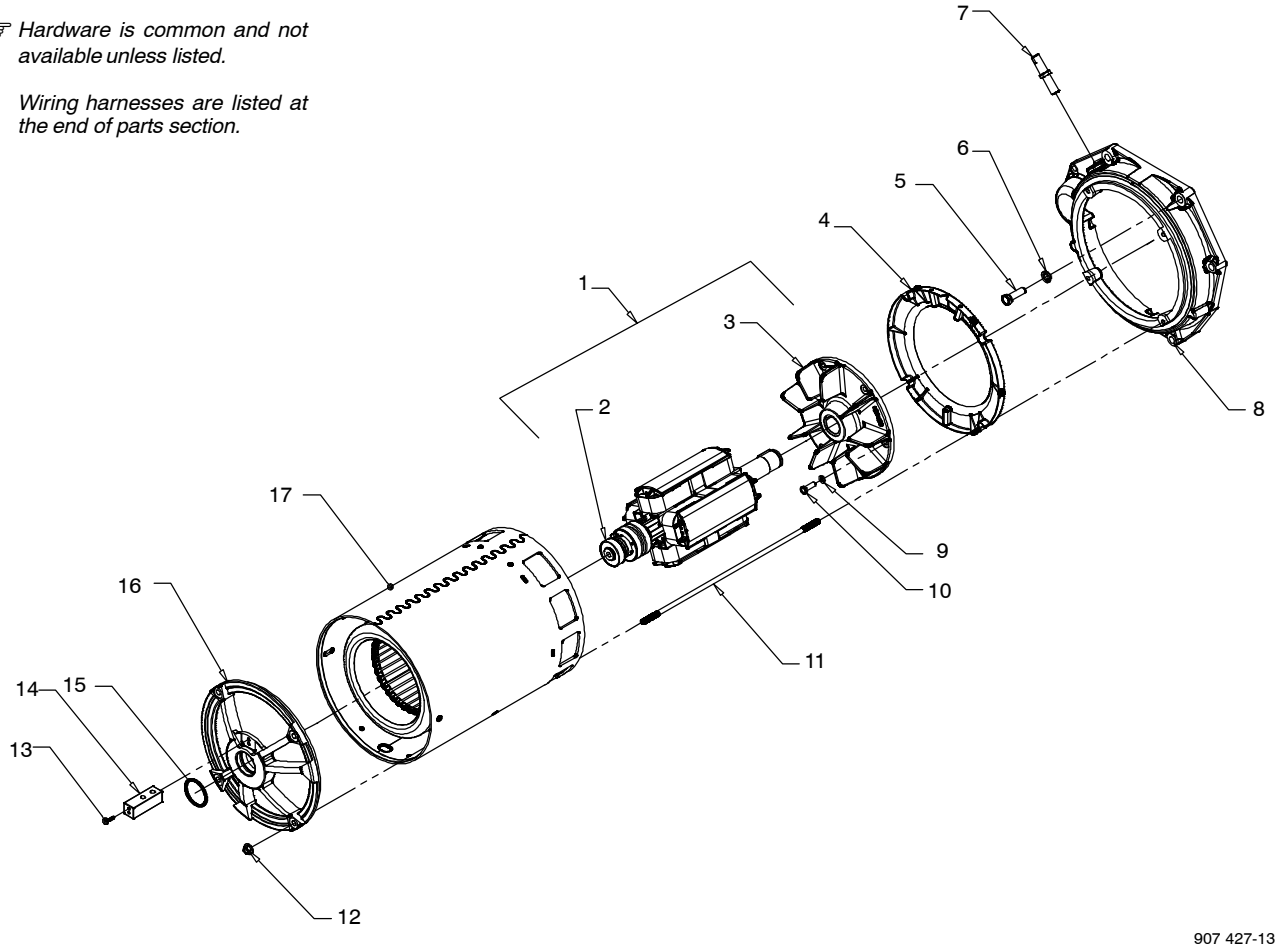

Figure 12-4. Generator

Item No.	Dia. Mkgs.	Part No.	Description	Quantity
			Figure 12-4. Generator (Figure 12-1 Item 61)	
1	ROTOR	243820	Rotor, Generator 4 Pole (Includes)	1
2		181143	Bearing, Ball Rdl Sgl Row .984 X 2.047 X .591	1
3		192600	Fan, Generator	1
4		159918	Baffle, Fan	1
5		243986	Screw, M12−1.25x 40 Hex Hd−pld Blk Grd 5	7
6		602216	Washer, Lock .502idx0.879odx.151t Stl Pld Split.500	7
7		242537	Pickup, Magnetic	1
8		241075	Adapter, Engine Machined Mitsubishi S4l2	1
9		602211	Washer, Lock .318idx0.586odx.078t Stl Pld Split.312	6
10		192686	Screw, M 8−1.25x 25 Hex Hd−pln 8.8 Pld Din933	6
11		212641	Stud, Stl .375−16 1.625x 19.000	4
12		167788	Nut, 375−16 .56hex .34h Stl Pld Sem Cone Wshr.88d	4
13		136343	Screw, K50x 20 Pan Hd−phl Stl Pld Pt Thread Forming	2
14		244290	Brushholder Assy, Generator W/Leads	1
15		183419	O−ring, 1.984 Id X .139 Cs 70 Duro Viton	1
16		183336	Endbell	1
17	STATOR	246720	Stator, Generator 4 Pole	1

\+ When ordering a component originally displaying a precautionary label, the label should also be ordered.

To maintain the factory original performance of your equipment, use only Manufacturer's Suggested Replacement Parts. Model and serial number required when ordering parts from your local distributor.

☞ *Hardware is common and not available unless listed.*

Wiring harnesses are listed at the end of parts section.

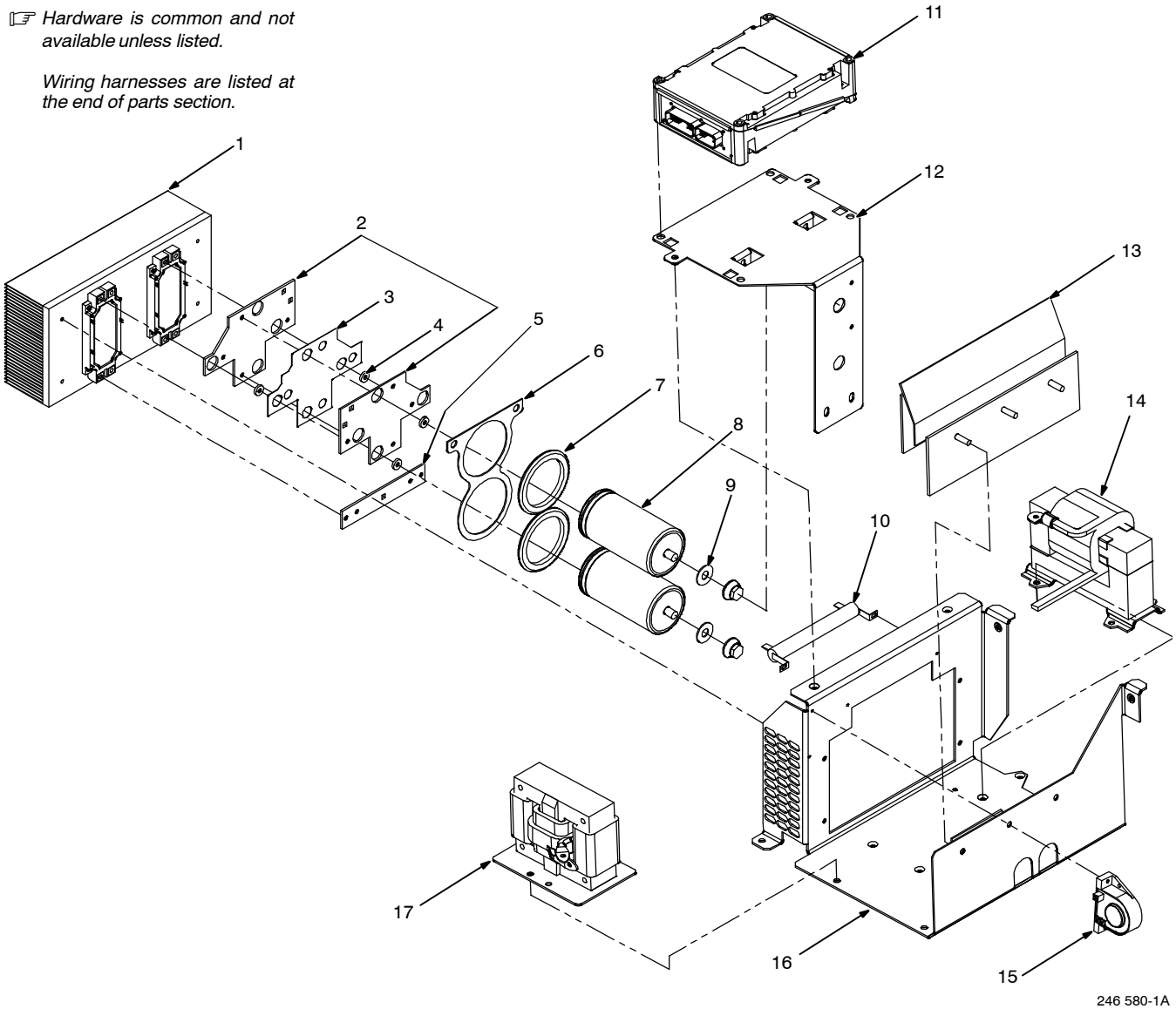

Figure 12-5. Weld Control Assembly

Item No.	Dia. Mkgs.	Part No.	Description	Quantity
			Figure 12-5. Weld Control Assembly 246 580 (Figure 12-1 Item 4)	
1	MOD1, 2	247407	Heat Sink, IGBT Assy	1
2		245359	Bus Bar	2
3		247091	Insulator ,Buss Bar	1
4		247093	Stand−off, Conductive Bus	4
5		245378	Buss Bar, AC	1
6		247092	Bracket, Capacitor Support	1
7		089178	Grommet, Rbr 3.000 Id X 3.500 Mtg Hole .062 Groove	2
8	C1	246841	Capacitor, Elctlt 35000 Uf 100 Vdc Can 3.00 Dia	2
9		239547	Washer, Flat Nylon .516 Id X 1.250 Od X .062 Thk	2
10	R3	188067	Resistor, Ww Fxd 00 W 200 Ohm W/Clips	1
11	PC1	246330	Module, Main Control/IGBT Gating	1
12		245360	Bracket, Mtg Vault	1
13	SR3	225516	Rectifier, Si 3ph 300 Amp 400 Piv 100% Duty Cycle	1
14	Z1	248548	Stabilizer	1

Item No.	Dia. Mkgs.	Part No.	Description	Quantity
			Figure 12-5. Weld Control Assembly 246 580 (Figure 12-1 Item 4)	
15	HD1	168829	Transducer, Current 1000a Module Max Open Loop	1
16		245361	Bracket, Mtg Components	1
17	T1	247224	Xfmr,Control	1

To maintain the factory original performance of your equipment, use only Manufacturer's Suggested Replacement Parts. Model and serial number required when ordering parts from your local distributor.

☞ *Some wiring harness components (switches, relays, supplementary protectors) are also referenced elsewhere in this parts list. Purchase components separately or as part of the associated wiring harness.*

Item No.	Dia. Mkgs.	Part No.	Description	Quantity
			Wiring Harnesses	
		244235	**Harness, Engine/Weld Mitsubishi (includes)**	1
	S1	226720	Housing Plug+Skts, (Service Kit)	1
	PLG1	234984	Housing Plug+Skts, (Service Kit)	1
	PLG2,9,16	153501	Housing Plug Pins+Skts, (Service Kit)	3
	PLG8	247696	Housing Plug+Skts, (Service Kit)	1
	PLG5	115094	Housing Plug+Skts, (Service Kit)	1
	PLG6	233834	Service Kit, Cinch Connector Repair 30 Pin	1
	PLG7,11	233829	Service Kit, Cinch Connector Repair 18 Pin	2
	RC3	166659	Housing Rcpt Pins+Skts, (Service Kit)	1
	PLG10,20	115092	Housing Plug+Skts, (Service Kit)	2
	PLG17	246948	Housing Plug+Pins, (Service Kit)	1
	RC9	166659	Housing Rcpt Pins+Skts, (Service Kit)	1
	PLG3	153501	Housing Plug Pins+Skts, (Service Kit)	1
	RC2	166659	Housing Rcpt Pins+Skts, (Service Kit)	1
		217000	Cable, Lem (Includes)	1
	PLG15	115094	Housing Plug+Skts, (Service Kit)	1
		247364	Harness, Governor Control (Includes)	1
	PLG12	247261	Housing Plug+Pins, (Service Kit)	1
		222687	**Harness, Receptacle Auxillary Power**	1

Warranty Questions?

Call
1-800-4-A-MILLER
for your local
Miller distributor.

Your distributor also gives you ...

Service
You always get the fast, reliable response you need. Most replacement parts can be in your hands in 24 hours.

Support
Need fast answers to the tough welding questions? Contact your distributor. The expertise of the distributor and Miller is there to help you, every step of the way.

TRUE BLUE® WARRANTY

Effective January 1, 2011
(Equipment with a serial number preface of MB or newer)

This limited warranty supersedes all previous Miller warranties and is exclusive with no other guarantees or warranties expressed or implied.

LIMITED WARRANTY – Subject to the terms and conditions below, Miller Electric Mfg. Co., Appleton, Wisconsin, warrants to its original retail purchaser that new Miller equipment sold after the effective date of this limited warranty is free of defects in material and workmanship at the time it is shipped by Miller. THIS WARRANTY IS EXPRESSLY IN LIEU OF ALL OTHER WARRANTIES, EXPRESS OR IMPLIED, INCLUDING THE WARRANTIES OF MERCHANTABILITY AND FITNESS.

Within the warranty periods listed below, Miller will repair or replace any warranted parts or components that fail due to such defects in material or workmanship. Miller must be notified in writing within thirty (30) days of such defect or failure, at which time Miller will provide instructions on the warranty claim procedures to be followed.

Miller shall honor warranty claims on warranted equipment listed below in the event of such a failure within the warranty time periods. All warranty time periods start on the delivery date of the equipment to the original end-user purchaser, and not to exceed one year after the equipment is shipped to a North American distributor or eighteen months after the equipment is shipped to an International distributor.

1. 5 Years Parts — 3 Years Labor
   * Original main power rectifiers only to include SCRs, diodes, and discrete rectifier modules
2. 3 Years — Parts and Labor
   * Engine Driven Welding Generators **(NOTE: Engines are warranted separately by the engine manufacturer.)**
   * Inverter Power Sources (Unless Otherwise Stated)
   * Plasma Arc Cutting Power Sources
   * Process Controllers
   * Semi-Automatic and Automatic Wire Feeders
   * Smith 30 Series Flowgauge and Flowmeter Regulators (No Labor)
   * Transformer/Rectifier Power Sources
   * Water Coolant Systems (Integrated)
3. 2 Years — Parts
   * Auto-Darkening Helmet Lenses (No Labor)
4. 1 Year — Parts and Labor Unless Specified
   * Automatic Motion Devices
   * CoolBelt and CoolBand Blower Unit (No Labor)
   * External Monitoring Equipment and Sensors
   * Field Options
     (NOTE: Field options are covered for the remaining warranty period of the product they are installed in, or for a minimum of one year — whichever is greater.)
   * Flowgauge and Flowmeter Regulators (No Labor)
   * RFCS Foot Controls (Except RFCS-RJ45)
   * Fume Extractors
   * HF Units
   * ICE Plasma Cutting Torches (No Labor)
   * Induction Heating Power Sources, Coolers, and Electronic Controls/Recorders
   * Load Banks
   * Motor Driven Guns (w/exception of Spoolmate Spoolguns)
   * PAPR Blower Unit (No Labor)
   * Positioners and Controllers
   * Racks
   * Running Gear/Trailers
   * Spot Welders
   * Subarc Wire Drive Assemblies
   * Water Coolant Systems (Non-Integrated)
   * Weldcraft-Branded TIG Torches (No Labor)
   * Wireless Remote Foot/Hand Controls and Receivers
   * Work Stations/Weld Tables (No Labor)
5. 6 Months — Parts
   * Batteries
   * Bernard Guns (No Labor)
   * Tregaskiss Guns (No Labor)
6. 90 Days — Parts
   * Accessory (Kits)
   * Canvas Covers
   * Induction Heating Coils and Blankets, Cables, and Non-Electronic Controls
   * M-Guns
   * MIG Guns and Subarc (SAW) Guns
   * Remote Controls and RFCS-RJ45
   * Replacement Parts (No labor)
   * Roughneck Guns
   * Spoolmate Spoolguns

Miller's True Blue® Limited Warranty shall not apply to:

1. **Consumable components; such as contact tips, cutting nozzles, contactors, brushes, relays, work station table tops and welding curtains, or parts that fail due to normal wear. (Exception: brushes and relays are covered on all engine-driven products.)**
2. Items furnished by Miller, but manufactured by others, such as engines or trade accessories. These items are covered by the manufacturer's warranty, if any.
3. Equipment that has been modified by any party other than Miller, or equipment that has been improperly installed, improperly operated or misused based upon industry standards, or equipment which has not had reasonable and necessary maintenance, or equipment which has been used for operation outside of the specifications for the equipment.

MILLER PRODUCTS ARE INTENDED FOR PURCHASE AND USE BY COMMERCIAL/INDUSTRIAL USERS AND PERSONS TRAINED AND EXPERIENCED IN THE USE AND MAINTENANCE OF WELDING EQUIPMENT.

In the event of a warranty claim covered by this warranty, the exclusive remedies shall be, at Miller's option: (1) repair; or (2) replacement; or, where authorized in writing by Miller in appropriate cases, (3) the reasonable cost of repair or replacement at an authorized Miller service station; or (4) payment of or credit for the purchase price (less reasonable depreciation based upon actual use) upon return of the goods at customer's risk and expense. Miller's option of repair or replacement will be F.O.B., Factory at Appleton, Wisconsin, or F.O.B. at a Miller authorized service facility as determined by Miller. Therefore no compensation or reimbursement for transportation costs of any kind will be allowed.

TO THE EXTENT PERMITTED BY LAW, THE REMEDIES PROVIDED HEREIN ARE THE SOLE AND EXCLUSIVE REMEDIES. IN NO EVENT SHALL MILLER BE LIABLE FOR DIRECT, INDIRECT, SPECIAL, INCIDENTAL OR CONSEQUENTIAL DAMAGES (INCLUDING LOSS OF PROFIT), WHETHER BASED ON CONTRACT, TORT OR ANY OTHER LEGAL THEORY.

ANY EXPRESS WARRANTY NOT PROVIDED HEREIN AND ANY IMPLIED WARRANTY, GUARANTY OR REPRESENTATION AS TO PERFORMANCE, AND ANY REMEDY FOR BREACH OF CONTRACT TORT OR ANY OTHER LEGAL THEORY WHICH, BUT FOR THIS PROVISION, MIGHT ARISE BY IMPLICATION, OPERATION OF LAW, CUSTOM OF TRADE OR COURSE OF DEALING, INCLUDING ANY IMPLIED WARRANTY OF MERCHANTABILITY OR FITNESS FOR PARTICULAR PURPOSE, WITH RESPECT TO ANY AND ALL EQUIPMENT FURNISHED BY MILLER IS EXCLUDED AND DISCLAIMED BY MILLER.

Some states in the U.S.A. do not allow limitations of how long an implied warranty lasts, or the exclusion of incidental, indirect, special or consequential damages, so the above limitation or exclusion may not apply to you. This warranty provides specific legal rights, and other rights may be available, but may vary from state to state.

In Canada, legislation in some provinces provides for certain additional warranties or remedies other than as stated herein, and to the extent that they may not be waived, the limitations and exclusions set out above may not apply. This Limited Warranty provides specific legal rights, and other rights may be available, but may vary from province to province.

Owner's Record

Please complete and retain with your personal records.

Model Name Serial/Style Number

Purchase Date (Date which equipment was delivered to original customer.)

Distributor

Address

City

State Zip

For Service

Contact a DISTRIBUTOR or SERVICE AGENCY near you.

Always provide Model Name and Serial/Style Number.

Contact your Distributor for:	Welding Supplies and Consumables Options and Accessories Personal Safety Equipment Service and Repair Replacement Parts Training (Schools, Videos, Books) Technical Manuals (Servicing Information and Parts) Circuit Diagrams Welding Process Handbooks To locate a Distributor or Service Agency visit www.millerwelds.com or call 1-800-4-A-Miller
Contact the Delivering Carrier to:	File a claim for loss or damage during shipment. For assistance in filing or settling claims, contact your distributor and/or equipment manufacturer's Transportation Department.

Miller Electric Mfg. Co.
An Illinois Tool Works Company
1635 West Spencer Street
Appleton, WI 54914 USA

International Headquarters–USA
USA Phone: 920-735-4505 Auto-Attended
USA & Canada FAX: 920-735-4134
International FAX: 920-735-4125

For International Locations Visit
www.MillerWelds.com

ORIGINAL INSTRUCTIONS – PRINTED IN USA

© 2011 Miller Electric Mfg. Co. 2011–01